BALEXMETAL

MW SANDWICH PANELS

TECHNICAL CATALOGUE

BALEXMETAL
WE BUILD TOGETHER

BALEXTHERM-MW-W-ST
BALEXTHERM-MW-D-W-ST
BALEXTHERM-MW-LT-W-ST
BALEXTHERM-MW-W-PLUS
BALEXTHERM-MW-R

Sandwich panels with mineral wool core

April 2021

TABLE OF CONTENTS

I. TECHNICAL INFORMATION ON ENCLOSURE MADE OF BALEXTHERM SANDWICH PANELS WITH A MINERAL WOOL CORE

II. DETAILED SOLUTIONS FOR ENCLOSURE MADE OF BALEXTHERM-MW-W-ST, BALEXTHERM-MW-D-W-ST, BALEXTHERM-MW-LT-W-ST, BALEXTHERM-MW-W-PLUS and BALEXTHERM-MW-R SANDWICH PANELS WITH MINERAL WOOL CORE

I. TECHNICAL INFORMATION ON ENCLOSURE MADE OF BALEXTHERM SANDWICH PANELS WITH A MINERAL WOOL CORE

1. GENERAL INFORMATION – ABOUT THE COMPANY

Balex Metal Sp. z o.o. is the leading manufacturer of steel construction materials in Poland. The Company's offer includes complete solutions as well as steel roofing and façade systems for residential industry, commercial and agricultural construction.

The range of products is recognised by customers in Poland, Belarus, Russia, Lithuania, Latvia, Estonia, Ukraine, Czech Republic, Slovakia, Germany, Denmark, Sweden, Finland, Island, USA, Norway and many others. Consulting and sales services are provided through own network of regional branches, cooperating distributors and a team of professional sales advisors.

Balex Metal owes its leading position in the market of manufacturing double-cladding steel core sandwich panels to its technologically advanced production lines purchased from the most renowned European companies, the team of employees with excellent qualifications as well as its special attention to quality.

2. BALEXTHERM SANDWICH PANEL SYSTEMS

Investors, architects, general contractors and assembly companies carrying out projects are interested in systematic project solutions. Thus they expect comprehensive provision of all indispensable elements and building material used in a particular project. In order to meet these expectations, BALEXMETAL has introduced complete wall and roof covering systems in its offer.

The most important elements of these systems are wall and roof sandwich panels consisting of two claddings made of steel sheets connected with construction and insulation core. Balex Metal offers panels in steel coatings with three types of insulation core:

- sandwich panels with mineral wool core, with strands of wool orientated perpendicularly to the claddings, under the name: BALEXTHERM-MW, described in this catalogue
- sandwich panels with polyurethane core, abbreviated to PUR, and Polyisocyanurate core, abbreviated to PIR : BALEXTHERM-PU

The basic type of wall sandwich panels are the ones with standard fastening (specified as BALEXTHERM- W-ST and PWS), mounted to the support structure all way through in visible places. Another type of wall panels are the ones with mounting connectors that are invisible from the side of facade (referred to as BALEXTHERM- W-PLUS). Specially designed panel lock covers the mounting points and they are invisible on ready facades.

Roof sandwich panels (referred to as BALEXTHERM-R and PWD) have very deeply re-profiled external coating in trapezoidal shape. This is because they have to bear long-term loads, including snow and own weight, with creep taken into account.

Apart from sandwich panels, the systems also include a wide range of various elements, such as steel flashings, accessories – connectors, screws, rivets, sealing materials, windows and doors adjusted to be assembled to sandwich panels, system roof skylights, gutter and drain systems.

What makes BALEXTHERM wall sandwich panel system by BALEXMETAL different from the others available on the market is their compatibility. Such possibilities are used in designing connections of anti-fire partitions with external building walls. An example of this is joining polyurethane core panels with mineral wool core panels in a vertical arrangement. The result is a vertical band of an external wall, minimum 2 m wide, made of non-flammable material and EI 60 fire resistance in different fire zones.

It makes sense to join elements of mineral wool core panels and panels with other types of core when designing the connection of ceiling and inter-storey band which should be made of non-flammable materials of appropriate fire resistance.

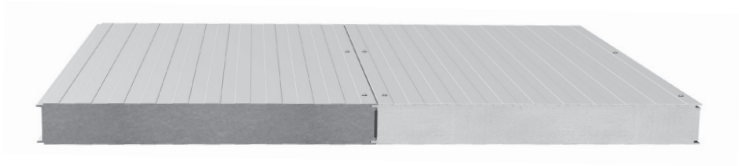

Fig. 1. A joint of BALEXTHERM-MW-W-ST and BALEXTHERM-PU-W-ST wall panels

Additional solutions that enable joining roof panels of different core thicknesses have been developed for BALEXTHERM-R roof panels. This makes it possible to design structurally uniform roof coverings, with purlins of various fire resistance properties. Such a connection requires using additional flashings.

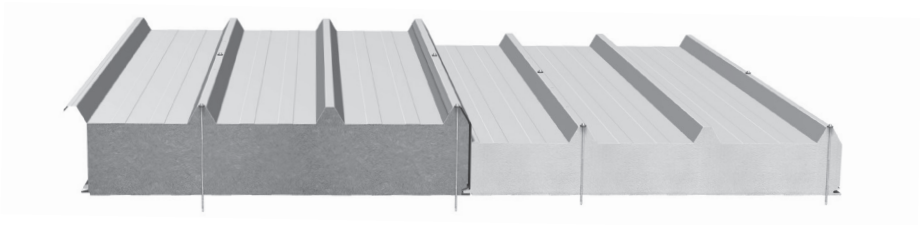

Fig. 2. A joint of of BALEXTHERM-MW-R and BALEXTHERM-PU-R roof panels of different thicknesses

The above discussed systems of roof sandwich panel enclosure solutions are legally protected as a utility model named 'Roof sandwich panel system with two-sided metal facing and insulating material core'.

Table 1. Terminology of BALEXTHERM panels

Name	Type of core	Type of panel	Type of lock
Balextherm	- mineral wool (MW) - polyurethane (PU)	- WALL (W)	- standard - with a visible joint (ST)
			- with a concealed joint (PLUS)
		- ROOF (R)	
		- FREEZING (F)	

E.g. BALEXTHERM-MW-W-ST is a panel with polyurethane core wall type with visible joint

3. BALEXTHERM-MW SANDWICH PANEL CONSTRUCTION

BALEXTHERM-MW sandwich panels have two claddings of steel sheet and a structural insulation core.

The core is made of hard mineral wool laths of 110 kg/ m3 bulk density. This material has the highest fire resistance parameters and is responsible for bearing shear stress, maintaining constant distance between coatings and providing high levels of heat and noise insulation.

Panel facings are made of 0,50 - 0,70 mm thick S250GD steel sheets, double zinced with zinc layer of up 275 g/m, in accordance with PN-EN 10346:2009 standard. The purpose of coatings is to bear normal stresses, and to protect the building against weather conditions.

Thanks to the construction described above, BALEXTHERM-MW panels have high bearing capacities and are rigid, which makes it possible to increase distances between supports (purlins, bolts and columns).

The wide choice of panel coating profiles and colours enables architects and designers to create various building facades and maintain the balance between beauty and functionality.

4. PRODUCTION TECHNOLOGY

Production of BALEXTHERM-MW mineral wool core panels began in 2010. Mineral wool core panels are produced in a continuous system, on a modern, fully automated production line purchased from an Italian company called PUMA.

The technological process of production of BALEXTHERM-MW mineral wool core sandwich panels consists of several stages, among which the most important for panel properties are:

- profiling of steel coatings
- joining laths of rock wool, which are the panel core: wool strands are positioned vertically, which increases mechanical properties of panel
- inserting the core between two continuously moving steel bands, and sticking the core to the coatings by polyurethane glue

During the production process, it is possible to insert an EPDM - SUPERIOR GASKET in the panel lock, which makes the connection tighter. The gasket also makes assembly time shorter, as applying additional sealing is not required. Panels with gaskets inserted from the internal side of the lock are recommended as standard. There is an option of making wall panels with gaskets in both inlets, i.e. from both the internal and the external side.

The whole production, including cutting and packing ready products, is a continuous process.

High quality and constant repetitiveness of BALEXTHERM sandwich panel technical parameters have been achieved thanks to using the highest quality raw materials and constant production control.

5. PANEL TYPES

Balex Metal offers three types of BALEXTHERM-MW panels:

BALEXTHERM-MW-W-ST - mineral wool core sandwich wall panel with visible joint. The modular (or covering) width of 1100 mm allows quick assembly and better use of transport space in vehicles of 2.40 m load width. BALEXTHERM-MW-W-ST panels are mounted to the structure by loop through joints. Core: mineral wool of nominal apparent density 110 kg/m^3.

BALEXTHERM-MW-D-W-ST DEFENDER - a wall sandwich panel with mineral wool core and visible joint (exposed fastening). Modular width (so called covering) 1100 mm allows for fast assembly and better use of transport capacity for the trucks of loading width 2.40m. BALEXTHERM-MW-D-W-ST panel is fixed to the construction with the switch-through. The core of the panel is a hard mineral wool of nominal apparent density 150kg/m^3. The DEFENDER panel meets the requirements of burglary protection grade 2 in accordance with SSF1047.

BALEXTHERM-MW-LT-W-ST LIGHT - a wall sandwich panel with mineral wool core and visible joint (exposed fastening). Modular width (so called covering) 1100 mm allows for fast assembly and better use of transport capacity for the trucks of loading width 2.40m. The core of the panel is a mineral wool of nominal apparent density 90kg/m^3 and fire resistance EIGO.

BALEXTHERM-MW-W-PLUS - mineral wool core sandwich wall panel with concealed joint invisible from the facade side, with modular widths of 1050 mm and 1000 mm. The fact that the fastening is invisible from the facade side and various profile types makes these panels very attractive from architectural and functional point of view.

BALEXTHERM-MW-R - mineral wool core sandwich roof panel (with an option of using it as a wall panel), with 1000 mm modular width and trapezoidal shaping of external surface. Trapezoidal profile of the upper coating guarantees high load bearing capacity for use loads and also during assembly.

Table 2. Types of BALEXTHERM-MW sandwich panels

Panel	Panel width [mm]	Panel shape
1	2	3
BALEXTHERM-MW-W-ST mineral wool core sandwich wall panel with visible joint	80; 100; 120; 150; 160; 180; 200; 240	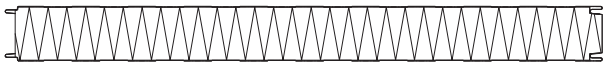
BALEXTHERM -MW-D-W-ST DEFENDER mineral wool core sandwich wall panel with visible joint	200; 240	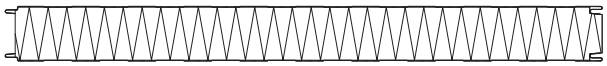
BALEXTHERM -MW-LT-W-ST LIGHT mineral wool core sandwich wall panel with visible joint	80; 100; 120; 150; 160; 180; 200; 240	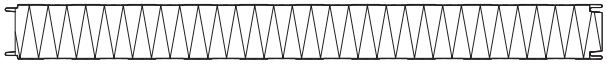
BALEXTHERM-MW-W-PLUS mineral wool core sandwich wall panel with concealed joint	80; 100; 120; 150; 160; 180; 200	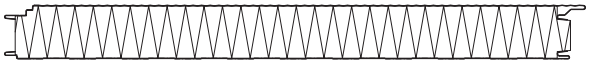
BALEXTHERM-MW-R mineral wool core sandwich roof panel	100; 120; 150; 160	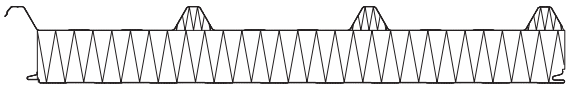

6. THE SCOPE OF PANEL APPLICATION

Sandwich panels are a building material commonly used as a light coating of buildings with increased fire resistance requirements, e.g.: industrial, warehouse, sports and production halls, shopping, office and social buildings and facilities, hangars, garages, workshops, administration and public buildings, storages (including the facilities where there is contact with food).

A wide scope of colours and various shapes of panel profiles make it possible to create a range of interesting building structures. The construction of the panels enables fast and easy assembly, in vertical and horizontal arrangement, whatever the weather. The type and arrangement of sandwich panels are selected by the designer, taking into account the purpose of the building, conditions of use, possible influence of the internal environment and weather factors.

BALEXTHERM-MW-W-ST and PLUS wall panels may also be applied on self-supporting suspended ceilings, while BALEXTHERM-MW-R roof panels may be used as wall ones.

BALEXTHERM panels are designated for low and moderate temperatures. Constant temperature on panel surface should not exceed + 60°C. Due to their low heat conductivity coefficient, BALEXTHERM sandwich panels are perfect for facades of heated buildings, as they minimise heat losses.

7. BALEXTHERM PANELS CONTACT TYPES

BALEXTHERM sandwich panels have a new construction. The unique shape of longitudinal joints, with optimal proportions between the thickness of tongue and groove in both coatings, both on the external and the internal side, has significantly increased fire resistance parameters of the panels.

Optional SUPERIOR GASKET in one or both of the lock grooves, applied during the production process, additionally increases connection tightness.

7.1. BALEXTHERM-MW-W-ST, BALEXTHERM-MW-D-W-ST, BALEXTHERM-MW-LT-W-ST mineral wool core wall sandwich panel with a visible joint

The longitudinal tongue and groove joint of BALEXTHERM-MW-W-ST standard panels is made of specially shaped steel claddings. Both the internal cladding and the external one have a two wrap shaped lock increasing fire tightness and facilitating assembly by conical tilt of one of the joint surfaces. Such a shape of the steel claddings enables applying sealing masses into the panel joint during assembly, which improves tightness against air and moisture penetration.

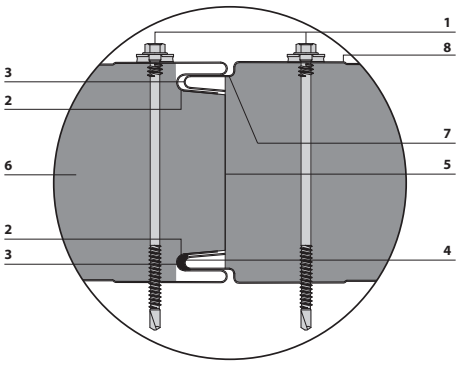

1) fastening joints
2) unique, two-side shaping of panel – lock joint, increasing fire tightness and facilitating assembly
3) conical tilt of internal internal joint surface, facilitating assembly, suitable for connection with panels with other cores
4) SUPERIOR GASKET - EPDM gasket applied during production, increasing connection tightness (optional)
5) adjusted panel connection, maintaining high thermal insulation properties
6) mineral wool core, specially prefabricated in line, providing high resistance
7) coating shape profiling technology, providing high durability of anti-corrosion claddings
8) a wide scope of external coating profiles, meeting high architectural requirements

7.2. BALEXTHERM-MW-W-PLUS mineral wool core wall sandwich panel with a concealed joint

BALEXTHERM-MW-W-PLUS wall panels with a concealed joint are also of the tongue and groove type, but they have an additional cladding protrusion formed specifically in the longitudinal joint on the facade side, covering the connector fastening the preceding panel.

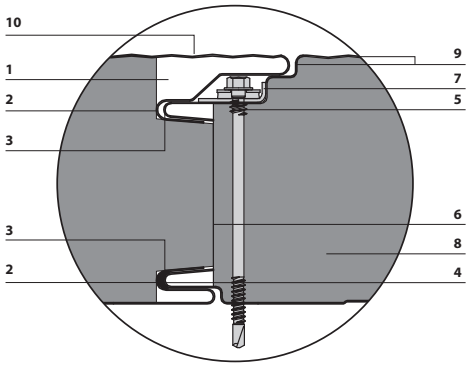

1) concealed structural connection, giving the facade an aesthetic look
2) unique, two-side shaping of panel - lock joint increasing fire tightness and facilitating assembly
3) conical tilt of internal internal joint surface, facilitating assembly, suitable for connection with panels with other cores
4) SUPERIOR GASKET - EPDM gasket applied during production, increasing connection tightness (optional)
5) longitudinal groove facilitating positioning of fasteners
6) precise panel connection, maintaining high thermal insulation properties
7) steel washer in the panel lock, increasing the bearing capacity of the connection
8) mineral wool core, specially prefabricated in line, providing high resistance
9) coating shape profiling technology, providing high durability of anti-corrosion claddings
10) a wide scope of external coating profiles, meeting high architectural requirements

7.3. BALEXTHERM-MW-R mineral wool core sandwich roof panel

The longitudinal joint of BALEXTHERM-MW-R roof panels consists of specifically shaped steel cladding. The lower cladding in one panel have a shape of groove, and in the other one of the tongue. The upper coatings have been designed so that the ending of the overlapping sheet of one panel covers the hump of the other panel filled with mineral wool. The system of connections used increases fire tightness and facilitates assembly. In addition, the eaves part of the lower coating with the core is removed as standard in BALEXTHERM-MW-R roof panels. This trim makes it easier to mount the gutter pipes, and makes it possible to have better tightness if panels are joined at length in tongue and groove system.

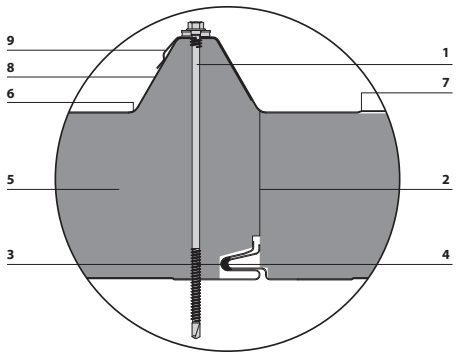

1) fastening joints
2) tight panel connection due to the adjusted mineral wool core
3) conical tilt of internal internal joint surface, facilitating assembly, suitable for connection with panels with other cores
4) SUPERIOR GASKET - EPDM gasket applied during production, increasing connection tightness (optional)
5) mineral wool core, specially prefabricated in line, providing high resistance
6) coating shape profiling technology, providing high durability of anti-corrosion claddings
7) trapezoidal profiling of external coating to increase bearing capacity of the roof panels and facilitating rainwater drainage
8) special profiling of the hump shape, providing panel tightness
9) clamp profiling, which prevents water penetration and significantly facilitates panel assembly

8. BASIC TECHNICAL INFORMATION

Table 3. BALEXTHERM-MW technical information

Panel type	Panel core thickness [mm]	Coating thickness [mm]		Panel weight [kg/m²]	Panel length L [m]	
		INT	EXT		min	max
1	2	3	4	5	6	7
BALEXTHERM-MW-W-ST mineral wool core wall sandwich panel with a visible joint	80	0,50-0,70	0,50-0,70	17,70	2,50	10,00
	100			19,80		12,00
	120			21,90		15,00
	150			25,01		
	160			26,10		
	180			28,20		
	200			30,30		
	240			34,50		
BALEXTHERM-MW-D-W-ST DEFENDER mineral wool core wall sandwich panel with a visible joint	200	0,60-0,70	0,60-0,70	41,3	2,5	15,00
	240			45,7		
BALEXTHERM-MW-LT-W-ST LIGHT mineral wool core wall sandwich panel with a visible joint	80	0,50-0,70	0,50-0,70	14,5	2,5	15,00
	100			16,2		
	120			17,9		
	150			20,5		
	160			21,4		
	180			23,1		
	200			24,8		
	240			28,3		
BALEXTHERM-MW-W-PLUS 1050 mineral wool core wall sandwich panel with a concealed joint	80	0,50-0,70	0,50-0,70	17,50	2,50	10,00
	100			19,60		12,00
	120			21,70		15,00
	150			24,90		
	160			25,90		
	180			28,00		
	200			30,10		
BALEXTHERM-MW-W-PLUS 1000 mineral wool core wall sandwich panel with a concealed fastening	80	0,50-0,70	0,50-0,70	17,10	2,50	10,00
	100			19,20		12,00
	120			21,30		15,00
	150			24,50		
	160			25,50		
	180			27,60		
	200			29,70		
BALEXTHERM-MW-R mineral wool core sandwich roof panel	100/145	0,50-0,70	0,50-0,70	20,30	2,50	15,00
	120/165			22,40		
	150/195			25,60		
	160/205			26,60		

Note: BALEXTHERM-MW-R roof thickness: the first digit refers to core thickness, and the second one to the total panel thickness including the hump

9. MATERIAL AND CLADDING COATINGS

9.1. Material

STEEL S220GD + ZINC, S250GD + ZINC, S280GD + ZINC (acc. to PN-EN 10346:2009)

- steel of increased parameters, zinced on both sides, permanently secured by anti-corrosion claddings
- steel sheet thickness: 0,50 - 0,70 mm
- organic and metallic claddings

9.2. Coatings

PREMIUM offer

CESAR PUR 55® - unparalleled durability and longevity

- polyurethane cladding with polyamide, thickness: 55 µm
- exceptional corrosion resistance RC5
- unparalleled durability: 30 years, depending on the environment
- very good resistance to intensive UV RUV4 radiation
- for standard, aggressive and demanding environments
- highly resistant to scratches
- the colour maintains its look and stability for a full use cycle
- **NOVELTY** in the Polish market: **ROOF OF THE YEAR 2013**
- for use on roofs, walls, **standard, aggressive and demanding environments**: cold, damp, high UV radiation, industrial and contaminated environments
- colours: 3009, 8004, 8017, 9006, 9007, 7016, 9005, 9010

Standard offer

POLYESTER

- cladding thickness 25 µm – for exteriors; resistant to temperature changes and weather conditions, good corrosion resistance
- cladding thickness 15 µm – for interiors – internal layers of walls and roofs
- colours acc. to the range of Balex Metal World of Colours

POLYESTER MAT PEARL

- cladding thickness 35 µm
- for exteriors; resistant to temperature changes and weather conditions, good corrosion resistance
- perfect for roof on commercial and industrial buildings
- colours acc. to the range of Balex Metal World of Colours

ALUZINC + Easyfilm®

- metallic cover of basis weight: 150 and 185 g/m^2
- cladding thickness 20 µm (for 150 g/m^2), 25 µm (for 185 g/m^2)
- two side cladding applied thermally in a continuous process, additional secured by a thin organic cladding: SPT (Special Protection Treatment), Easyfilm® (environmentally friendly, without chrome, compliant with the EU directives)
- resistance to increased temperatures; high resistance to corrosion; excellent heat and light reflectiveness; good abrasion resistance.

Special requests offer

PVDF

- cladding thickness 25 µm
- good resistance to corrosion and mechanical damage; exceptionally high durability of colours and resistance to wearing off (at temperatures up to 110° C); it may be easily formed and the surface is very hard, which significantly prevents debris accumulation and loss of gloss
- particularly recommended for exteriors (external coatings of buildings)
- colours acc. to the range of Balex Metal World of Colours

PCV(F) "food safe"

- cladding thickness 120 µm
- white foil
- special cladding with increased hardness
- for food industry facilities and cold storages; easy to wash and resistant to most washing agents

ZINCED

- cladding thickness 20 µm
- metallic cladding with basis weight 275 g/m^2 (self-galvanisation process occurs, i.e. scratches and cut edges cover themselves with zinc)
- two-side cladding, applied thermally on steel sheet
- high resistance to corrosion factors and mechanical damage

10. FACING COLOUR SCHEME

Colour scheme according to the Balex Metal World of Colours palette

PREMIUM coating

CESAR PUR 55® - polyurethane with polyamide: 3009, 8004, 8017, 9006, 9007, 7016, 9005, 9010

Organic coatings

Polyester 25 µm: 3000, 3016, 3011, 8012, 8004, 8017, 8019, 5010, 6011, 6020 6005, 1015, 1003, 9010, 9002, 7035, 9006, 9007, 7024, 7016 9005

Polyester MAT Pearl 35 µm: 8637M, 8620M, 8019M, 3301M, 7591M, 7016M, 6490M, 9005M

PVC(F) food safe: 9010 – applied for panel type BALEXTHERM-MW-W-ST

Metallic coatings

ALUCYNK+ Easyfilm®: AZ 185 (25 µm)

Table 4. Classification of colours by relative brightness

Symbol	Name	Group
9010	white	very bright
9002	grey white	
7035	light grey	
1015	ivory	
6011	reseda green	bright
9006	silver metallic	
9007	grey-aluminium	
1003	signal-yellow	
9005	black	dark
5010	signal-blue	
6005	dark green	
6020	fir-green	
7024	graphite-grey	
7016	graphite	
8019	dark brown	
8017	chocolate brown	
8012	red-brown	
8004	brick (incl. Rustic)	
3016	coral-red	
3011	red	
3009	cherry	
3000	fiery-red	

Not all the colours are available for all steel thicknesses (0.5, 0.6. 0.7).
For more information please contact our sales representative.

11. FACINGS PROFILING SCHEME

BALEXTHERM sandwich panels from Balex Metal have various profile types available, in particular of external facade facing. This is why it is possible to create an effect of beautiful and unique facades.

Profile types:

M = MICRO-PROFILED

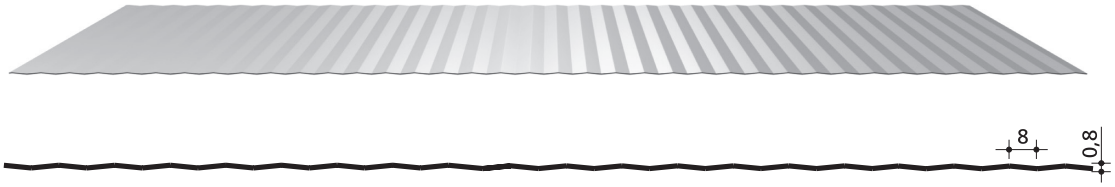

L = LINED

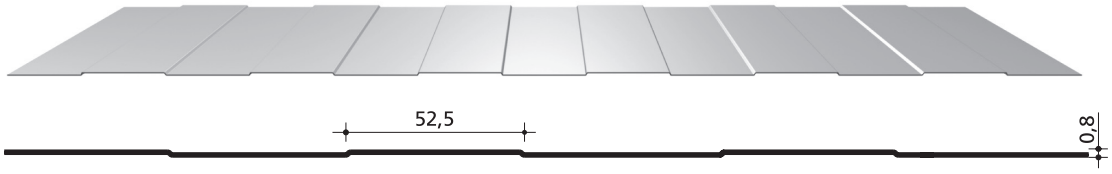

R = GROOVING

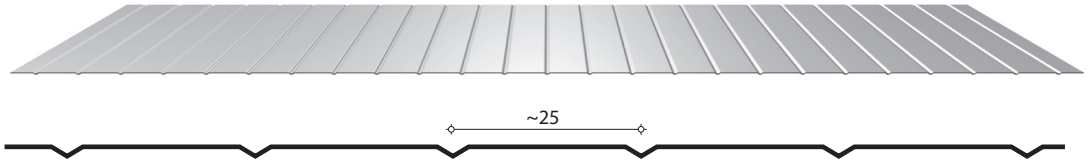

G = FLAT*

**Available only for claddings of min. 0,60 mm thickness*

T = TRAPEZOIDAL

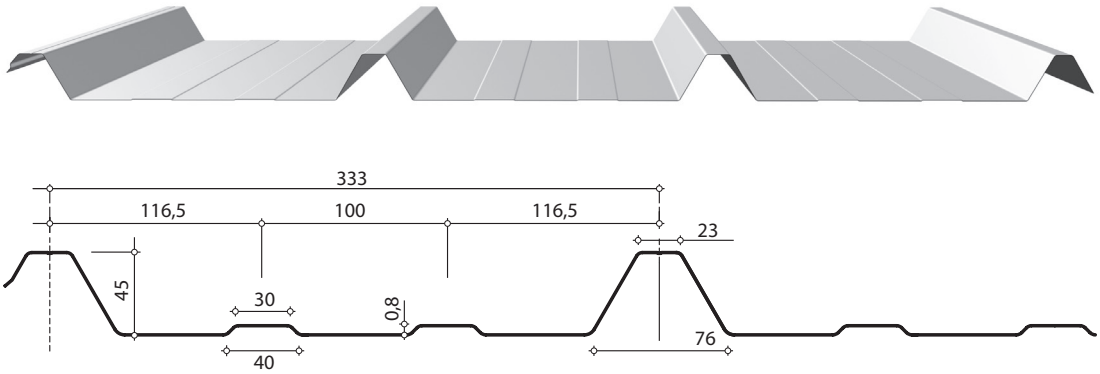

The table below shows combinations of profiling types of external and internal claddings available for respective panel types.

Table 5. Combinations of profiling types

Panel type	External cladding					Internal cladding	
	M	L	R	G*	T	L	G*
BALEXTHERM-MW-W-ST	●	●	●	●		●	●
BALEXTHERM-MW-D-W-ST DEFENDER	●	●	●	●		●	●
BALEXTHERM-MW-LT-W-ST LIGHT	●	●	●	●		●	●**
BALEXTHERM-MW-W-PLUS 1000	●	●				●	●
BALEXTHERM-MW-W-PLUS 1050	●	●	●	●		●	●
BALEXTHERM-MW-R					●	●	●

** Available only for the cladding thickness > 0,5 mm*
*** Available only for cladding thickness 0,60 mm*

12. RESISTANCE CONSIDERATIONS

In accordance with the ordinance of the Minister of Infrastructure dated 12th April 2002 on technical conditions to be met by buildings and their location, designing and constructing buildings and their elements must take into account the safety of the construction. In part V entitled "Safety of the construction § 204" there is a definition of the safety of building construction and building elements:

„The construction of the building should meet the requirements that prevent exceeding the ultimate and serviceability limit states to use in all its elements and the whole construction.

Limits of bearing capacity are deemed to have been exceeded if the construction poses a threat to the safety of people in the building and its vicinity, and also damage to equipment and belongings kept there.

Ultimate limits are deemed to have been exceeded if the requirements for usability concerning the construction have not been met. "

1. Considering the above guidelines the following assumptions have been made for the tables showing bearing capacity and rigidity values for using BALEXTHERM-MW sandwich panels:

the limit of usability, which in the case of sandwich panels is rigidity, is deemed to have been exceeded if diffractions of wall and roof panels under short term loads exceed 1/200 of the span, and in the case of long term loads exceed 1/100 of the span.

2. The range of use for BALEXTHERM panels due to their bearing capacity and rigidity should be in accordance with the tables given. The values of permissible loads specified in the tables take into account:

a) influence of thermal loads triggered by differences in temperatures between external and internal claddings ($t_{int.}$= 25°C in the summer and $t_{int.}$= 20°C in the winter). As far as thermal loads are concerned, the assumed temperature differences depend on the colour of the external cladding of the panels.

b) influence of long term loads (for roof panels)

c) the most unfavourable load combinations

d) increased diffraction where the load is from the direction of support, when panels are fastened by two connectors at width.

3. The maximum loads given in the tables should be compared to characteristic loads.

4. The maximum loads given in the tables have been specified for panels in three external cladding colour groups, where the assumed external temperature values (t_{ext}) are as follows:

a) group I - very light colours: in the summer t_{ext}= 55°C

b) group II - light colours: in the summer t_{ext}= 65°C

c) group III - dark colours: in the summer t_{ext}= 80°C.

5. The tables include all types and combinations of profiles for both claddings of sheet.

6. For permissible loads for spans that are not given in the tables interpolation may be applied.

7. Minimum width of intermediate supports is 60 mm, and end supports 40 mm.

8. To fasten sandwich panels use the fasteners described in chapter 17.

9. In near edge areas, the span of supports should be appropriately decreased in relation to the ones given in the tables.

10. The values for load from the support direction may be applied if the element to which the panel is screwed has a width not lower than 1,50 mm.

Table 6. 1 span arrangement - maximum characteristic loads for BALEXTHERM-MW-W-ST sandwich panels with mineral wool core, in claddings of 0,50/0,50 mm thickness, profile types: M/L, 40mm outer support width. Direction of force - TO THE SUPPORT

BALEXTHERM-MW-W-ST																														
Core thickness	Colour group	Maximum loads [kN/m²] for the span L[m]																												
		1,25	1,50	1,75	2,00	2,25	2,50	2,75	3,00	3,25	3,50	3,75	4,00	4,25	4,50	4,75	5,00	5,25	5,50	5,75	6,00	6,25	6,50	6,75	7,00	7,25	7,50	7,75	8,00
80	I	3,04	2,53	2,17	1,90	1,69	1,52	1,38	1,26	1,17	1,08	1,01	0,96	0,90	0,85	0,81	0,76	0,73	0,69	0,65	0,59	0,55	0,50	0,47	0,43	0,40	0,38	0,35	0,31
	II	3,04	2,53	2,17	1,90	1,69	1,52	1,38	1,26	1,17	1,08	1,01	0,96	0,90	0,85	0,81	0,76	0,73	0,69	0,65	0,59	0,55	0,50	0,47	0,43	0,40	0,38	0,35	0,31
	III	3,04	2,53	2,17	1,90	1,69	1,52	1,38	1,26	1,17	1,08	1,01	0,96	0,90	0,85	0,81	0,76	0,73	0,69	0,65	0,59	0,55	0,50	0,47	0,43	0,40	0,38	0,35	0,31
100	I	3,04	2,53	2,17	1,90	1,69	1,52	1,38	1,26	1,17	1,08	1,01	0,96	0,90	0,85	0,81	0,76	0,73	0,69	0,66	0,64	0,61	0,59	0,55	0,52	0,48	0,45	0,42	0,37
	II	3,04	2,53	2,17	1,90	1,69	1,52	1,38	1,26	1,17	1,08	1,01	0,96	0,90	0,85	0,81	0,76	0,73	0,69	0,66	0,64	0,61	0,59	0,55	0,52	0,48	0,45	0,42	0,37
	III	3,04	2,53	2,17	1,90	1,69	1,52	1,38	1,26	1,17	1,08	1,01	0,96	0,90	0,85	0,81	0,76	0,73	0,69	0,66	0,64	0,61	0,59	0,55	0,52	0,48	0,45	0,42	0,37
120	I	3,04	2,53	2,17	1,90	1,69	1,52	1,38	1,26	1,17	1,08	1,01	0,96	0,90	0,85	0,81	0,76	0,73	0,69	0,66	0,64	0,61	0,59	0,57	0,54	0,53	0,51	0,48	0,45
	II	3,04	2,53	2,17	1,90	1,69	1,52	1,38	1,26	1,17	1,08	1,01	0,96	0,90	0,85	0,81	0,76	0,73	0,69	0,66	0,64	0,61	0,59	0,57	0,54	0,53	0,51	0,48	0,45
	III	3,04	2,53	2,17	1,90	1,69	1,52	1,38	1,26	1,17	1,08	1,01	0,96	0,90	0,85	0,81	0,76	0,73	0,69	0,66	0,64	0,61	0,59	0,57	0,54	0,53	0,51	0,48	0,45
150	I	3,04	2,53	2,17	1,90	1,69	1,52	1,38	1,26	1,17	1,08	1,01	0,96	0,90	0,85	0,81	0,76	0,73	0,69	0,66	0,64	0,61	0,59	0,57	0,54	0,53	0,51	0,49	0,48
	II	3,04	2,53	2,17	1,90	1,69	1,52	1,38	1,26	1,17	1,08	1,01	0,96	0,90	0,85	0,81	0,76	0,73	0,69	0,66	0,64	0,61	0,59	0,57	0,54	0,53	0,51	0,49	0,48
	III	3,04	2,53	2,17	1,90	1,69	1,52	1,38	1,26	1,17	1,08	1,01	0,96	0,90	0,85	0,81	0,76	0,73	0,69	0,66	0,64	0,61	0,59	0,57	0,54	0,53	0,51	0,49	0,48
160	I	3,04	2,53	2,17	1,90	1,69	1,52	1,38	1,26	1,17	1,08	1,01	0,96	0,90	0,85	0,81	0,76	0,73	0,69	0,66	0,64	0,61	0,59	0,57	0,54	0,53	0,51	0,49	0,48
	II	3,04	2,53	2,17	1,90	1,69	1,52	1,38	1,26	1,17	1,08	1,01	0,96	0,90	0,85	0,81	0,76	0,73	0,69	0,66	0,64	0,61	0,59	0,57	0,54	0,53	0,51	0,49	0,48
	III	3,04	2,53	2,17	1,90	1,69	1,52	1,38	1,26	1,17	1,08	1,01	0,96	0,90	0,85	0,81	0,76	0,73	0,69	0,66	0,64	0,61	0,59	0,57	0,54	0,53	0,51	0,49	0,48
180	I	3,04	2,53	2,17	1,90	1,69	1,52	1,38	1,26	1,17	1,08	1,01	0,96	0,90	0,85	0,81	0,76	0,73	0,69	0,66	0,64	0,61	0,59	0,57	0,54	0,53	0,51	0,49	0,48
	II	3,04	2,53	2,17	1,90	1,69	1,52	1,38	1,26	1,17	1,08	1,01	0,96	0,90	0,85	0,81	0,76	0,73	0,69	0,66	0,64	0,61	0,59	0,57	0,54	0,53	0,51	0,49	0,48
	III	3,04	2,53	2,17	1,90	1,69	1,52	1,38	1,26	1,17	1,08	1,01	0,96	0,90	0,85	0,81	0,76	0,73	0,69	0,66	0,64	0,61	0,59	0,57	0,54	0,53	0,51	0,49	0,48
200	I	2,80	2,33	2,00	1,75	1,55	1,40	1,27	1,16	1,07	1,07	0,94	0,88	0,83	0,78	0,74	0,70	0,67	0,64	0,61	0,58	0,56	0,54	0,52	0,50	0,48	0,47	0,45	0,44
	II	2,80	2,33	2,00	1,75	1,55	1,40	1,27	1,16	1,07	1,07	0,94	0,88	0,83	0,78	0,74	0,70	0,67	0,64	0,61	0,58	0,56	0,54	0,52	0,50	0,48	0,47	0,45	0,44
	III	2,80	2,33	2,00	1,75	1,55	1,40	1,27	1,16	1,07	1,07	0,94	0,88	0,83	0,78	0,74	0,70	0,67	0,64	0,61	0,58	0,56	0,54	0,52	0,50	0,48	0,47	0,45	0,44
240	I	2,80	2,33	2,00	1,75	1,55	1,40	1,27	1,16	1,07	1,07	0,94	0,88	0,83	0,78	0,74	0,70	0,67	0,64	0,61	0,58	0,56	0,54	0,52	0,50	0,48	0,47	0,45	0,44
	II	2,80	2,33	2,00	1,75	1,55	1,40	1,27	1,16	1,07	1,07	0,94	0,88	0,83	0,78	0,74	0,70	0,67	0,64	0,61	0,58	0,56	0,54	0,52	0,50	0,48	0,47	0,45	0,44
	III	2,80	2,33	2,00	1,75	1,55	1,40	1,27	1,16	1,07	1,07	0,94	0,88	0,83	0,78	0,74	0,70	0,67	0,64	0,61	0,58	0,56	0,54	0,52	0,50	0,48	0,47	0,45	0,44

Colour groups: ***I*** *- very light colours,* ***II*** *- light colours,* ***III*** *- dark colours*
Linear support has been assumed. Panels mounted by loop through connectors with aluminium or steel washers. Support width: min. 40mm.

Table 7. 2 span arrangement - maximum characteristic loads for BALEXTHERM-MW-W-ST sandwich panels with mineral wool core, in claddings of 0,50/0,50 mm thickness, profile types: M/L, 40mm outer support width, 60mm inner support width.
Direction of force - TO THE SUPPORT

BALEXTHERM-MW-W-ST																														
Core thickness	Colour group	Maximum loads [kN/m²] for the span L[m]																												
		1,25	1,50	1,75	2,00	2,25	2,50	2,75	3,00	3,25	3,50	3,75	4,00	4,25	4,50	4,75	5,00	5,25	5,50	5,75	6,00	6,25	6,50	6,75	7,00	7,25	7,50	7,75	8,00
80	I	2,28	1,90	1,63	1,42	1,26	1,14	1,03	0,96	0,88	0,82	0,76	0,72	0,67	0,64	0,60	0,57	0,54	0,52	0,50	0,48	0,46	0,44	0,42	0,41	0,39	0,38	0,35	0,33
	II	2,28	1,90	1,63	1,42	1,26	1,14	1,03	0,96	0,88	0,82	0,76	0,72	0,67	0,64	0,60	0,57	0,54	0,52	0,50	0,48	0,46	0,44	0,42	0,41	0,39	0,38	0,35	0,33
	III	2,28	1,90	1,63	1,42	1,26	1,14	1,03	0,96	0,88	0,82	0,76	0,72	0,67	0,64	0,60	0,57	0,54	0,52	0,50	0,48	0,46	0,44	0,42	0,41	0,39	0,38	0,35	0,33
100	I	2,28	1,90	1,63	1,42	1,26	1,14	1,03	0,96	0,88	0,82	0,76	0,72	0,67	0,64	0,60	0,57	0,54	0,52	0,50	0,48	0,46	0,44	0,42	0,41	0,39	0,38	0,37	0,36
	II	2,28	1,90	1,63	1,42	1,26	1,14	1,03	0,96	0,88	0,82	0,76	0,72	0,67	0,64	0,60	0,57	0,54	0,52	0,50	0,48	0,46	0,44	0,42	0,41	0,39	0,38	0,37	0,36
	III	2,28	1,90	1,63	1,42	1,26	1,14	1,03	0,96	0,88	0,82	0,76	0,72	0,67	0,64	0,60	0,57	0,54	0,52	0,50	0,48	0,46	0,44	0,42	0,41	0,39	0,38	0,37	0,36
120	I	2,28	1,90	1,63	1,42	1,26	1,14	1,03	0,96	0,88	0,82	0,76	0,72	0,67	0,64	0,60	0,57	0,54	0,52	0,50	0,48	0,46	0,44	0,42	0,41	0,39	0,38	0,37	0,36
	II	2,28	1,90	1,63	1,42	1,26	1,14	1,03	0,96	0,88	0,82	0,76	0,72	0,67	0,64	0,60	0,57	0,54	0,52	0,50	0,48	0,46	0,44	0,42	0,41	0,39	0,38	0,37	0,36
	III	2,28	1,90	1,63	1,42	1,26	1,14	1,03	0,96	0,88	0,82	0,76	0,72	0,67	0,64	0,60	0,57	0,54	0,52	0,50	0,48	0,46	0,44	0,42	0,41	0,39	0,38	0,37	0,36
150	I	2,28	1,90	1,63	1,42	1,26	1,14	1,03	0,96	0,88	0,82	0,76	0,72	0,67	0,64	0,60	0,57	0,54	0,52	0,50	0,48	0,46	0,44	0,42	0,41	0,39	0,38	0,37	0,36
	II	2,28	1,90	1,63	1,42	1,26	1,14	1,03	0,96	0,88	0,82	0,76	0,72	0,67	0,64	0,60	0,57	0,54	0,52	0,50	0,48	0,46	0,44	0,42	0,41	0,39	0,38	0,37	0,36
	III	2,28	1,90	1,63	1,42	1,26	1,14	1,03	0,96	0,88	0,82	0,76	0,72	0,67	0,64	0,60	0,57	0,54	0,52	0,50	0,48	0,46	0,44	0,42	0,41	0,39	0,38	0,37	0,36
160	I	2,28	1,90	1,63	1,42	1,26	1,14	1,03	0,96	0,88	0,82	0,76	0,72	0,67	0,64	0,60	0,57	0,54	0,52	0,50	0,48	0,46	0,44	0,42	0,41	0,39	0,38	0,37	0,36
	II	2,28	1,90	1,63	1,42	1,26	1,14	1,03	0,96	0,88	0,82	0,76	0,72	0,67	0,64	0,60	0,57	0,54	0,52	0,50	0,48	0,46	0,44	0,42	0,41	0,39	0,38	0,37	0,36
	III	2,28	1,90	1,63	1,42	1,26	1,14	1,03	0,96	0,88	0,82	0,76	0,72	0,67	0,64	0,60	0,57	0,54	0,52	0,50	0,48	0,46	0,44	0,42	0,41	0,39	0,38	0,37	0,36
180	I	2,28	1,90	1,63	1,42	1,26	1,14	1,03	0,96	0,88	0,82	0,76	0,72	0,67	0,64	0,60	0,57	0,54	0,52	0,50	0,48	0,46	0,44	0,42	0,41	0,39	0,38	0,37	0,36
	II	2,28	1,90	1,63	1,42	1,26	1,14	1,03	0,96	0,88	0,82	0,76	0,72	0,67	0,64	0,60	0,57	0,54	0,52	0,50	0,48	0,46	0,44	0,42	0,41	0,39	0,38	0,37	0,36
	III	2,28	1,90	1,63	1,42	1,26	1,14	1,03	0,96	0,88	0,82	0,76	0,72	0,67	0,64	0,60	0,57	0,54	0,52	0,50	0,48	0,46	0,44	0,42	0,41	0,39	0,38	0,37	0,36
200	I	2,10	1,75	1,50	1,31	1,16	1,05	0,96	0,88	0,81	0,75	0,70	0,66	0,62	0,58	0,55	0,53	0,50	0,48	0,46	0,44	0,42	0,40	0,39	0,37	0,36	0,35	0,34	0,33
	II	2,10	1,75	1,50	1,31	1,16	1,05	0,96	0,88	0,81	0,75	0,70	0,66	0,62	0,58	0,55	0,53	0,50	0,48	0,46	0,44	0,42	0,40	0,39	0,37	0,36	0,35	0,34	0,33
	III	2,10	1,75	1,50	1,31	1,16	1,05	0,96	0,88	0,81	0,75	0,70	0,66	0,62	0,58	0,55	0,53	0,50	0,48	0,46	0,44	0,42	0,40	0,39	0,37	0,36	0,35	0,34	0,33
240	I	2,10	1,75	1,50	1,31	1,16	1,05	0,96	0,88	0,81	0,75	0,70	0,66	0,62	0,58	0,55	0,53	0,50	0,48	0,46	0,44	0,42	0,40	0,39	0,37	0,36	0,35	0,34	0,33
	II	2,10	1,75	1,50	1,31	1,16	1,05	0,96	0,88	0,81	0,75	0,70	0,66	0,62	0,58	0,55	0,53	0,50	0,48	0,46	0,44	0,42	0,40	0,39	0,37	0,36	0,35	0,34	0,33
	III	2,10	1,75	1,50	1,31	1,16	1,05	0,96	0,88	0,81	0,75	0,70	0,66	0,62	0,58	0,55	0,53	0,50	0,48	0,46	0,44	0,42	0,40	0,39	0,37	0,36	0,35	0,34	0,33

Colour groups: ***I*** *- very light colours,* ***II*** *- light colours,* ***III*** *- dark colours*
Linear support has been assumed. Panels mounted by loop through connectors with aluminium or steel washers. Support width: min. 40mm.

Table 8. 3 span arrangement - maximum characteristic loads for BALEXTHERM-MW-W-ST sandwich panels with mineral wool core, in claddings of 0,50/0,50 mm thickness, profile types: M/L, 40mm outer support width, 60mm inner support width.
Direction of force - TO THE SUPPORT

BALEXTHERM-MW-W-ST																														
Core thickness	Colour group	Maximum loads [kN/m²] for the span L[m]																												
		1,25	1,50	1,75	2,00	2,25	2,50	2,75	3,00	3,25	3,50	3,75	4,00	4,25	4,50	4,75	5,00	5,25	5,50	5,75	6,00	6,25	6,50	6,75	7,00	7,25	7,50	7,75	8,00
80	I	2,28	1,90	1,63	1,42	1,26	1,14	1,03	0,96	0,88	0,82	0,76	0,72	0,67	0,64	0,60	0,57	0,54	0,52	0,50	0,48	0,46	0,44	0,42	0,41	0,39	0,38	0,35	0,33
	II	2,28	1,90	1,63	1,42	1,26	1,14	1,03	0,96	0,88	0,82	0,76	0,72	0,67	0,64	0,60	0,57	0,54	0,52	0,50	0,48	0,46	0,44	0,42	0,41	0,39	0,38	0,35	0,33
	III	2,28	1,90	1,63	1,42	1,26	1,14	1,03	0,96	0,88	0,82	0,76	0,72	0,67	0,64	0,60	0,57	0,54	0,52	0,50	0,48	0,46	0,44	0,42	0,41	0,39	0,38	0,35	0,33
100	I	2,28	1,90	1,63	1,42	1,26	1,14	1,03	0,96	0,88	0,82	0,76	0,72	0,67	0,64	0,60	0,57	0,54	0,52	0,50	0,48	0,46	0,44	0,42	0,41	0,39	0,38	0,37	0,36
	II	2,28	1,90	1,63	1,42	1,26	1,14	1,03	0,96	0,88	0,82	0,76	0,72	0,67	0,64	0,60	0,57	0,54	0,52	0,50	0,48	0,46	0,44	0,42	0,41	0,39	0,38	0,37	0,36
	III	2,28	1,90	1,63	1,42	1,26	1,14	1,03	0,96	0,88	0,82	0,76	0,72	0,67	0,64	0,60	0,57	0,54	0,52	0,50	0,48	0,46	0,44	0,42	0,41	0,39	0,38	0,37	0,36
120	I	2,28	1,90	1,63	1,42	1,26	1,14	1,03	0,96	0,88	0,82	0,76	0,72	0,67	0,64	0,60	0,57	0,54	0,52	0,50	0,48	0,46	0,44	0,42	0,41	0,39	0,38	0,37	0,36
	II	2,28	1,90	1,63	1,42	1,26	1,14	1,03	0,96	0,88	0,82	0,76	0,72	0,67	0,64	0,60	0,57	0,54	0,52	0,50	0,48	0,46	0,44	0,42	0,41	0,39	0,38	0,37	0,36
	III	2,28	1,90	1,63	1,42	1,26	1,14	1,03	0,96	0,88	0,82	0,76	0,72	0,67	0,64	0,60	0,57	0,54	0,52	0,50	0,48	0,46	0,44	0,42	0,41	0,39	0,38	0,37	0,36
150	I	2,28	1,90	1,63	1,42	1,26	1,14	1,03	0,96	0,88	0,82	0,76	0,72	0,67	0,64	0,60	0,57	0,54	0,52	0,50	0,48	0,46	0,44	0,42	0,41	0,39	0,38	0,37	0,36
	II	2,28	1,90	1,63	1,42	1,26	1,14	1,03	0,96	0,88	0,82	0,76	0,72	0,67	0,64	0,60	0,57	0,54	0,52	0,50	0,48	0,46	0,44	0,42	0,41	0,39	0,38	0,37	0,36
	III	2,28	1,90	1,63	1,42	1,26	1,14	1,03	0,96	0,88	0,82	0,76	0,72	0,67	0,64	0,60	0,57	0,54	0,52	0,50	0,48	0,46	0,44	0,42	0,41	0,39	0,38	0,37	0,36
160	I	2,28	1,90	1,63	1,42	1,26	1,14	1,03	0,96	0,88	0,82	0,76	0,72	0,67	0,64	0,60	0,57	0,54	0,52	0,50	0,48	0,46	0,44	0,42	0,41	0,39	0,38	0,37	0,36
	II	2,28	1,90	1,63	1,42	1,26	1,14	1,03	0,96	0,88	0,82	0,76	0,72	0,67	0,64	0,60	0,57	0,54	0,52	0,50	0,48	0,46	0,44	0,42	0,41	0,39	0,38	0,37	0,36
	III	2,28	1,90	1,63	1,42	1,26	1,14	1,03	0,96	0,88	0,82	0,76	0,72	0,67	0,64	0,60	0,57	0,54	0,52	0,50	0,48	0,46	0,44	0,42	0,41	0,39	0,38	0,37	0,36
180	I	2,28	1,90	1,63	1,42	1,26	1,14	1,03	0,96	0,88	0,82	0,76	0,72	0,67	0,64	0,60	0,57	0,54	0,52	0,50	0,48	0,46	0,44	0,42	0,41	0,39	0,38	0,37	0,36
	II	2,28	1,90	1,63	1,42	1,26	1,14	1,03	0,96	0,88	0,82	0,76	0,72	0,67	0,64	0,60	0,57	0,54	0,52	0,50	0,48	0,46	0,44	0,42	0,41	0,39	0,38	0,37	0,36
	III	2,28	1,90	1,63	1,42	1,26	1,14	1,03	0,96	0,88	0,82	0,76	0,72	0,67	0,64	0,60	0,57	0,54	0,52	0,50	0,48	0,46	0,44	0,42	0,41	0,39	0,38	0,37	0,36
200	I	2,10	1,75	1,50	1,31	1,16	1,05	0,96	0,88	0,81	0,75	0,70	0,66	0,62	0,58	0,55	0,53	0,50	0,48	0,46	0,44	0,42	0,40	0,39	0,37	0,36	0,35	0,34	0,33
	II	2,10	1,75	1,50	1,31	1,16	1,05	0,96	0,88	0,81	0,75	0,70	0,66	0,62	0,58	0,55	0,53	0,50	0,48	0,46	0,44	0,42	0,40	0,39	0,37	0,36	0,35	0,34	0,33
	III	2,10	1,75	1,50	1,31	1,16	1,05	0,96	0,88	0,81	0,75	0,70	0,66	0,62	0,58	0,55	0,53	0,50	0,48	0,46	0,44	0,42	0,40	0,39	0,37	0,36	0,35	0,34	0,33
240	I	2,10	1,75	1,50	1,31	1,16	1,05	0,96	0,88	0,81	0,75	0,70	0,66	0,62	0,58	0,55	0,53	0,50	0,48	0,46	0,44	0,42	0,40	0,39	0,37	0,36	0,35	0,34	0,33
	II	2,10	1,75	1,50	1,31	1,16	1,05	0,96	0,88	0,81	0,75	0,70	0,66	0,62	0,58	0,55	0,53	0,50	0,48	0,46	0,44	0,42	0,40	0,39	0,37	0,36	0,35	0,34	0,33
	III	2,10	1,75	1,50	1,31	1,16	1,05	0,96	0,88	0,81	0,75	0,70	0,66	0,62	0,58	0,55	0,53	0,50	0,48	0,46	0,44	0,42	0,40	0,39	0,37	0,36	0,35	0,34	0,33

Colour groups: ***I*** *- very light colours,* ***II*** *- light colours,* ***III*** *- dark colours*
Linear support has been assumed. Panels mounted by loop through connectors with aluminium or steel washers. Support width: min. 40mm.

Table 9. 1 span arrangement - maximum characteristic loads for BALEXTHERM-MW-W-ST sandwich panels with mineral wool core, in claddings of 0,50/0,50 mm thickness, profile types: M/L, 40mm outer support width, Direction of force - FROM THE SUPPORT

BALEXTHERM-MW-W-ST																														
Core thickness	Colour group	Maximum loads [kN/m²] for the span L[m]																												
		1,25	1,50	1,75	2,00	2,25	2,50	2,75	3,00	3,25	3,50	3,75	4,00	4,25	4,50	4,75	5,00	5,25	5,50	5,75	6,00	6,25	6,50	6,75	7,00	7,25	7,50	7,75	8,00
80	I	-3,47	-2,89	-2,48	-2,17	-1,92	-1,73	-1,57	-1,44	-1,33	-1,23	-1,15	-1,08	-1,02	-0,97	-0,92	-0,87	-0,83	-0,79	-0,72	-0,66	-0,61	-0,57	-0,52	-0,49	-0,45	-0,42	-0,39	-0,36
	II	-3,47	-2,89	-2,48	-2,17	-1,92	-1,73	-1,57	-1,44	-1,33	-1,23	-1,15	-1,08	-1,02	-0,97	-0,92	-0,87	-0,83	-0,79	-0,72	-0,66	-0,61	-0,57	-0,52	-0,48	-0,43	-0,39	-0,35	-0,31
	III	-3,47	-2,89	-2,48	-2,17	-1,92	-1,73	-1,57	-1,44	-1,33	-1,23	-1,15	-1,08	-1,02	-0,97	-0,92	-0,87	-0,83	-0,79	-0,72	-0,66	-0,55	-0,46	-0,39	-0,32	-0,26	-0,21	-0,17	-0,14
100	I	-4,35	-3,63	-3,11	-2,72	-2,41	-2,17	-1,97	-1,81	-1,67	-1,55	-1,45	-1,36	-1,28	-1,20	-1,14	-1,08	-1,02	-0,94	-0,86	-0,79	-0,72	-0,67	-0,62	-0,58	-0,54	-0,50	-0,47	-0,44
	II	-4,35	-3,63	-3,11	-2,72	-2,41	-2,17	-1,97	-1,81	-1,67	-1,55	-1,45	-1,36	-1,28	-1,20	-1,14	-1,08	-1,02	-0,94	-0,86	-0,79	-0,72	-0,67	-0,62	-0,58	-0,54	-0,50	-0,47	-0,44
	III	-4,35	-3,63	-3,11	-2,72	-2,41	-2,17	-1,97	-1,81	-1,67	-1,55	-1,45	-1,36	-1,28	-1,20	-1,14	-1,08	-1,02	-0,94	-0,86	-0,79	-0,72	-0,67	-0,62	-0,58	-0,54	-0,50	-0,47	-0,42
120	I	-5,24	-4,36	-3,74	-3,27	-2,90	-2,61	-2,38	-2,18	-2,01	-1,86	-1,74	-1,63	-1,53	-1,45	-1,37	-1,27	-1,15	-1,05	-0,97	-0,89	-0,82	-0,76	-0,70	-0,65	-0,61	-0,57	-0,53	-0,50
	II	-5,24	-4,36	-3,74	-3,27	-2,90	-2,61	-2,38	-2,18	-2,01	-1,86	-1,74	-1,63	-1,53	-1,45	-1,37	-1,27	-1,15	-1,05	-0,97	-0,89	-0,82	-0,76	-0,70	-0,65	-0,61	-0,57	-0,53	-0,50
	III	-5,24	-4,36	-3,74	-3,27	-2,90	-2,61	-2,38	-2,18	-2,01	-1,86	-1,74	-1,63	-1,53	-1,45	-1,37	-1,27	-1,15	-1,05	-0,97	-0,89	-0,82	-0,76	-0,70	-0,65	-0,61	-0,57	-0,53	-0,50
150	I	-6,56	-5,46	-4,68	-4,10	-3,64	-3,27	-2,98	-2,73	-2,52	-2,34	-2,18	-2,04	-1,92	-1,79	-1,60	-1,45	-1,31	-1,19	-1,09	-1,00	-0,93	-0,86	-0,80	-0,74	-0,69	-0,65	-0,61	-0,57
	II	-6,56	-5,46	-4,68	-4,10	-3,64	-3,27	-2,98	-2,73	-2,52	-2,34	-2,18	-2,04	-1,92	-1,79	-1,60	-1,45	-1,31	-1,19	-1,09	-1,00	-0,93	-0,86	-0,80	-0,74	-0,69	-0,65	-0,61	-0,57
	III	-6,56	-5,46	-4,68	-4,10	-3,64	-3,27	-2,98	-2,73	-2,52	-2,34	-2,18	-2,04	-1,92	-1,79	-1,60	-1,45	-1,31	-1,19	-1,09	-1,00	-0,93	-0,86	-0,80	-0,74	-0,69	-0,65	-0,61	-0,57
160	I	-7,00	-5,83	-5,00	-4,37	-3,88	-3,50	-3,18	-2,91	-2,69	-2,49	-2,33	-2,18	-2,05	-1,86	-1,67	-1,51	-1,37	-1,25	-1,14	-1,05	-0,97	-0,90	-0,83	-0,77	-0,72	-0,67	-0,63	-0,59
	II	-7,00	-5,83	-5,00	-4,37	-3,88	-3,50	-3,18	-2,91	-2,69	-2,49	-2,33	-2,18	-2,05	-1,86	-1,67	-1,51	-1,37	-1,25	-1,14	-1,05	-0,97	-0,90	-0,83	-0,77	-0,72	-0,67	-0,63	-0,59
	III	-7,00	-5,83	-5,00	-4,37	-3,88	-3,50	-3,18	-2,91	-2,69	-2,49	-2,33	-2,18	-2,05	-1,86	-1,67	-1,51	-1,37	-1,25	-1,14	-1,05	-0,97	-0,90	-0,83	-0,77	-0,72	-0,67	-0,63	-0,59
180	I	-7,88	-6,56	-5,62	-4,92	-4,37	-3,94	-3,58	-3,28	-3,03	-2,81	-2,62	-2,46	-2,22	-1,98	-1,78	-1,60	-1,45	-1,32	-1,21	-1,11	-1,02	-0,96	-0,89	-0,82	-0,77	-0,72	-0,67	-0,63
	II	-7,88	-6,56	-5,62	-4,92	-4,37	-3,94	-3,58	-3,28	-3,03	-2,81	-2,62	-2,46	-2,22	-1,98	-1,78	-1,60	-1,45	-1,32	-1,21	-1,11	-1,02	-0,96	-0,89	-0,82	-0,77	-0,72	-0,67	-0,63
	III	-7,88	-6,56	-5,62	-4,92	-4,37	-3,94	-3,58	-3,28	-3,03	-2,81	-2,62	-2,46	-2,22	-1,98	-1,78	-1,60	-1,45	-1,32	-1,21	-1,11	-1,02	-0,96	-0,89	-0,82	-0,77	-0,72	-0,67	-0,63
200	I	-8,76	-7,30	-6,25	-5,47	-4,86	-4,38	-3,98	-3,65	-3,37	-3,12	-2,92	-2,65	-2,34	-2,09	-1,88	-1,69	-1,53	-1,40	-1,28	-1,17	-1,08	-1,00	-0,94	-0,87	-0,81	-0,76	-0,71	-0,66
	II	-8,76	-7,30	-6,25	-5,47	-4,86	-4,38	-3,98	-3,65	-3,37	-3,12	-2,92	-2,65	-2,34	-2,09	-1,88	-1,69	-1,53	-1,40	-1,28	-1,17	-1,08	-1,00	-0,94	-0,87	-0,81	-0,76	-0,71	-0,66
	III	-8,76	-7,30	-6,25	-5,47	-4,86	-4,38	-3,98	-3,65	-3,37	-3,12	-2,92	-2,65	-2,34	-2,09	-1,88	-1,69	-1,53	-1,40	-1,28	-1,17	-1,08	-1,00	-0,94	-0,87	-0,81	-0,76	-0,71	-0,66
240	I	-10,52	-8,76	-7,51	-6,57	-5,84	-5,26	-4,78	-4,38	-4,04	-3,64	-3,17	-2,78	-2,46	-2,20	-1,97	-1,78	-1,61	-1,47	-1,34	-1,23	-1,14	-1,05	-0,98	-0,91	-0,85	-0,80	-0,74	-0,70
	II	-10,52	-8,76	-7,51	-6,57	-5,84	-5,26	-4,78	-4,38	-4,04	-3,64	-3,17	-2,78	-2,46	-2,20	-1,97	-1,78	-1,61	-1,47	-1,34	-1,23	-1,14	-1,05	-0,98	-0,91	-0,85	-0,80	-0,74	-0,70
	III	-10,52	-8,76	-7,51	-6,57	-5,84	-5,26	-4,78	-4,38	-4,04	-3,64	-3,17	-2,78	-2,46	-2,20	-1,97	-1,78	-1,61	-1,47	-1,34	-1,23	-1,14	-1,05	-0,98	-0,91	-0,85	-0,80	-0,74	-0,70

Colour groups: ***I*** *- very light colours,* ***II*** *- light colours,* ***III*** *- dark colours*
Linear support has been assumed. Panels mounted by loop through connectors with aluminium or steel washers. Support width: min. 40mm.

Table 10. 2 span arrangement - maximum characteristic loads for BALEXTHERM-MW-W-ST sandwich panels with mineral wool core, in claddings of 0,50/0,50 mm thickness, profile types: M/L, 40mm outer support width, 60mm inner support width.
Direction of force - FROM THE SUPPORT

BALEXTHERM-MW-W-ST																															
Core thickness	Colour group	Maximum loads [kN/m²] for the span L[m]																													
		1,25	1,50	1,75	2,00	2,25	2,50	2,75	3,00	3,25	3,50	3,75	4,00	4,25	4,50	4,75	5,00	5,25	5,50	5,75	6,00	6,25	6,50	6,75	7,00	7,25	7,50	7,75	8,00		
80	I	-3,47	-2,89	-2,47	-2,16	-1,92	-1,73	-1,57	-1,44	-1,33	-1,23	-1,15	-1,08	-1,02	-0,97	-0,92	-0,87	-0,83	-0,79	-0,72	-0,66	-0,61	-0,57	-0,52	-0,49	-0,45	-0,42	-0,40	-0,37		
	II	-3,47	-2,89	-2,47	-2,16	-1,92	-1,73	-1,57	-1,44	-1,33	-1,23	-1,15	-1,08	-1,02	-0,97	-0,92	-0,87	-0,83	-0,79	-0,72	-0,66	-0,61	-0,57	-0,52	-0,49	-0,45	-0,42	-0,40	-0,37		
	III	-3,47	-2,89	-2,47	-2,16	-1,92	-1,73	-1,57	-1,44	-1,33	-1,23	-1,15	-1,08	-1,02	-0,97	-0,92	-0,84	-0,73	-0,65	-0,57	-0,51	-0,46	-0,41	-0,38	-0,34	-0,31	-0,29	-0,27	-0,25		
100	I	-4,35	-3,62	-3,10	-2,72	-2,41	-2,17	-1,97	-1,81	-1,67	-1,55	-1,45	-1,36	-1,28	-1,20	-1,14	-1,08	-1,02	-0,94	-0,86	-0,79	-0,72	-0,67	-0,62	-0,58	-0,54	-0,50	-0,47	-0,44		
	II	-4,35	-3,62	-3,10	-2,72	-2,41	-2,17	-1,97	-1,81	-1,67	-1,55	-1,45	-1,36	-1,28	-1,20	-1,14	-1,08	-1,02	-0,94	-0,86	-0,79	-0,72	-0,67	-0,62	-0,58	-0,54	-0,50	-0,47	-0,44		
	III	-4,35	-3,62	-3,10	-2,72	-2,41	-2,17	-1,97	-1,81	-1,67	-1,55	-1,45	-1,36	-1,28	-1,20	-1,07	-0,96	-0,83	-0,72	-0,64	-0,56	-0,50	-0,45	-0,40	-0,36	-0,33	-0,30	-0,28	-0,25		
120	I	-5,24	-4,36	-3,74	-3,27	-2,90	-2,61	-2,38	-2,18	-2,01	-1,86	-1,74	-1,63	-1,53	-1,45	-1,37	-1,27	-1,15	-1,05	-0,97	-0,89	-0,82	-0,76	-0,70	-0,65	-0,61	-0,57	-0,53	-0,50		
	II	-5,24	-4,36	-3,74	-3,27	-2,90	-2,61	-2,38	-2,18	-2,01	-1,86	-1,74	-1,63	-1,53	-1,45	-1,37	-1,27	-1,15	-1,05	-0,97	-0,89	-0,82	-0,76	-0,70	-0,65	-0,61	-0,57	-0,53	-0,50		
	III	-5,24	-4,36	-3,74	-3,27	-2,90	-2,61	-2,38	-2,18	-2,01	-1,86	-1,74	-1,63	-1,53	-1,31	-1,08	-0,98	-0,83	-0,72	-0,62	-0,54	-0,48	-0,43	-0,38	-0,34	-0,31	-0,28	-0,25	-0,23		
150	I	-6,55	-5,46	-4,68	-4,09	-3,64	-3,27	-2,98	-2,73	-2,52	-2,34	-2,18	-2,04	-1,92	-1,79	-1,60	-1,45	-1,31	-1,19	-1,09	-1,00	-0,93	-0,86	-0,80	-0,74	-0,69	-0,65	-0,61	-0,57		
	II	-6,55	-5,46	-4,68	-4,09	-3,64	-3,27	-2,98	-2,73	-2,52	-2,34	-2,18	-2,04	-1,92	-1,79	-1,60	-1,45	-1,31	-1,19	-1,09	-1,00	-0,93	-0,86	-0,80	-0,74	-0,69	-0,64	-0,59	-0,54		
	III	-6,55	-5,46	-4,68	-4,09	-3,64	-3,27	-2,98	-2,73	-2,52	-2,34	-2,18	-2,04	-1,68	-1,33	-1,06	-0,94	-0,78	-0,65	-0,55	-0,47	-0,40	-0,34	-0,30	-0,26	-0,23	-0,20	-0,18	-0,16		
160	I	-6,99	-5,83	-4,99	-4,37	-3,88	-3,49	-3,18	-2,91	-2,69	-2,49	-2,33	-2,18	-2,05	-1,86	-1,67	-1,51	-1,37	-1,25	-1,14	-1,05	-0,97	-0,90	-0,83	-0,77	-0,72	-0,67	-0,63	-0,59		
	II	-6,99	-5,83	-4,99	-4,37	-3,88	-3,49	-3,18	-2,91	-2,69	-2,49	-2,33	-2,18	-2,05	-1,86	-1,67	-1,51	-1,37	-1,25	-1,14	-1,05	-0,97	-0,90	-0,83	-0,77	-0,71	-0,65	-0,59	-0,55		
	III	-6,99	-5,83	-4,99	-4,37	-3,88	-3,49	-3,18	-2,91	-2,69	-2,49	-2,33	-2,18	-1,72	-1,35	-1,06	-0,94	-0,77	-0,64	-0,53	-0,44	-0,37	-0,32	-0,27	-0,23	-0,20	-0,17	-0,15	-0,13		
180	I	-7,87	-6,56	-5,62	-4,92	-4,37	-3,94	-3,58	-3,28	-3,03	-2,81	-2,62	-2,46	-2,22	-1,98	-1,78	-1,60	-1,45	-1,32	-1,21	-1,11	-1,02	-0,96	-0,89	-0,82	-0,77	-0,72	-0,67	-0,63		
	II	-7,87	-6,56	-5,62	-4,92	-4,37	-3,94	-3,58	-3,28	-3,03	-2,81	-2,62	-2,46	-2,22	-1,98	-1,78	-1,60	-1,45	-1,32	-1,21	-1,11	-1,02	-0,96	-0,88	-0,80	-0,72	-0,66	-0,60	-0,55		
	III	-7,87	-6,56	-5,62	-4,92	-4,37	-3,94	-3,58	-3,28	-3,03	-2,81	-2,62	-2,41	-1,84	-1,41	-1,09	-0,95	-0,76	-0,61	-0,50	-0,41	-0,33	-0,27	-0,22	-0,18	-0,15	-0,13	-0,10	-0,08		
200	I	-8,76	-7,30	-6,25	-5,47	-4,86	-4,38	-3,98	-3,65	-3,37	-3,12	-2,92	-2,65	-2,34	-2,09	-1,88	-1,69	-1,53	-1,40	-1,28	-1,17	-1,08	-0,99	-0,94	-0,87	-0,81	-0,76	-0,71	-0,66		
	II	-8,76	-7,30	-6,25	-5,47	-4,86	-4,38	-3,98	-3,65	-3,37	-3,12	-2,92	-2,65	-2,34	-2,09	-1,88	-1,69	-1,53	-1,40	-1,28	-1,17	-1,06	-0,99	-0,89	-0,80	-0,72	-0,65	-0,60	-0,54		
	III	-8,76	-7,30	-6,25	-5,47	-4,86	-4,38	-3,98	-3,65	-3,37	-3,12	-2,92	-2,54	-1,90	-1,43	-1,07	-0,92	-0,72	-0,56	-0,44	-0,34	-0,26	-0,20	-0,16	-0,12	-0,09	-0,06	-0,04	-0,02		
240	I	-10,51	-8,76	-7,51	-6,57	-5,84	-5,26	-4,78	-4,38	-4,04	-3,64	-3,17	-2,78	-2,46	-2,20	-1,97	-1,78	-1,61	-1,47	-1,34	-1,23	-1,14	-1,05	-0,98	-0,91	-0,85	-0,80	-0,74	-0,70		
	II	-10,51	-8,76	-7,51	-6,57	-5,84	-5,26	-4,78	-4,38	-4,04	-3,64	-3,17	-2,78	-2,46	-2,20	-1,97	-1,78	-1,61	-1,47	-1,34	-1,17	-1,02	-0,95	-0,83	-0,74	-0,66	-0,59	-0,53	-0,48		
	III	-10,51	-8,76	-7,51	-6,57	-5,84	-5,26	-4,78	-4,38	-4,04	-3,64	-3,17	-2,62	-1,86	-1,31	-1,97	-0,75	-0,52	-0,36	-0,23	-0,13	-0,06	0,00	0,00	0,00	0,00	0,00	0,00	0,00		

*Colour groups: **I** - very light colours, **II** - light colours, **III** - dark colours*
Linear support has been assumed. Panels mounted by loop through connectors with aluminium or steel washers. Support width: min. 40mm.

Table 11. 3 span arrangement - maximum characteristic loads for BALEXTHERM-MW-W-ST sandwich panels with mineral wool core, in claddings of 0,50/0,50 mm thickness, profile types: M/L, 40mm outer support width, 60mm inner support width.
Direction of force - FROM THE SUPPORT

BALEXTHERM-MW-W-ST																															
Core thickness	Colour group	Maximum loads [kN/m²] for the span L[m]																													
		1,25	1,50	1,75	2,00	2,25	2,50	2,75	3,00	3,25	3,50	3,75	4,00	4,25	4,50	4,75	5,00	5,25	5,50	5,75	6,00	6,25	6,50	6,75	7,00	7,25	7,50	7,75	8,00		
80	I	-3,47	-2,89	-2,47	-2,16	-1,92	-1,73	-1,57	-1,44	-1,33	-1,23	-1,15	-1,08	-1,02	-0,97	-0,92	-0,87	-0,83	-0,79	-0,72	-0,66	-0,61	-0,57	-0,52	-0,49	-0,45	-0,42	-0,40	-0,37		
	II	-3,47	-2,89	-2,47	-2,16	-1,92	-1,73	-1,57	-1,44	-1,33	-1,23	-1,15	-1,08	-1,02	-0,97	-0,92	-0,87	-0,83	-0,79	-0,72	-0,66	-0,61	-0,57	-0,52	-0,49	-0,45	-0,42	-0,40	-0,37		
	III	-3,47	-2,89	-2,47	-2,16	-1,92	-1,73	-1,57	-1,44	-1,33	-1,23	-1,15	-1,08	-1,02	-0,97	-0,92	-0,87	-0,83	-0,79	-0,72	-0,66	-0,61	-0,57	-0,52	-0,49	-0,45	-0,42	-0,40	-0,37		
100	I	-4,35	-3,62	-3,10	-2,72	-2,41	-2,17	-1,97	-1,81	-1,67	-1,55	-1,45	-1,36	-1,28	-1,20	-1,14	-1,08	-1,02	-0,94	-0,86	-0,79	-0,72	-0,67	-0,62	-0,58	-0,54	-0,50	-0,47	-0,44		
	II	-4,35	-3,62	-3,10	-2,72	-2,41	-2,17	-1,97	-1,81	-1,67	-1,55	-1,45	-1,36	-1,28	-1,20	-1,14	-1,08	-1,02	-0,94	-0,86	-0,79	-0,72	-0,67	-0,62	-0,58	-0,54	-0,50	-0,47	-0,44		
	III	-4,35	-3,62	-3,10	-2,72	-2,41	-2,17	-1,97	-1,81	-1,67	-1,55	-1,45	-1,36	-1,28	-1,20	-1,14	-1,08	-1,02	-0,94	-0,86	-0,79	-0,72	-0,67	-0,62	-0,58	-0,54	-0,50	-0,47	-0,44		
120	I	-5,24	-4,36	-3,74	-3,27	-2,90	-2,61	-2,38	-2,18	-2,01	-1,86	-1,74	-1,63	-1,53	-1,45	-1,37	-1,27	-1,15	-1,05	-0,97	-0,89	-0,82	-0,76	-0,70	-0,65	-0,61	-0,57	-0,53	-0,50		
	II	-5,24	-4,36	-3,74	-3,27	-2,90	-2,61	-2,38	-2,18	-2,01	-1,86	-1,74	-1,63	-1,53	-1,45	-1,37	-1,27	-1,15	-1,05	-0,97	-0,89	-0,82	-0,76	-0,70	-0,65	-0,61	-0,57	-0,53	-0,50		
	III	-5,24	-4,36	-3,74	-3,27	-2,90	-2,61	-2,38	-2,18	-2,01	-1,86	-1,74	-1,63	-1,53	-1,45	-1,37	-1,27	-1,15	-1,05	-0,97	-0,89	-0,82	-0,76	-0,70	-0,65	-0,61	-0,57	-0,53	-0,50		
150	I	-6,55	-5,46	-4,68	-4,09	-3,64	-3,27	-2,98	-2,73	-2,52	-2,34	-2,18	-2,04	-1,92	-1,79	-1,60	-1,45	-1,31	-1,19	-1,09	-1,00	-0,93	-0,86	-0,80	-0,74	-0,69	-0,65	-0,61	-0,57		
	II	-6,55	-5,46	-4,68	-4,09	-3,64	-3,27	-2,98	-2,73	-2,52	-2,34	-2,18	-2,04	-1,92	-1,79	-1,60	-1,45	-1,31	-1,19	-1,09	-1,00	-0,93	-0,86	-0,80	-0,74	-0,69	-0,65	-0,61	-0,57		
	III	-6,55	-5,46	-4,68	-4,09	-3,64	-3,27	-2,98	-2,73	-2,52	-2,34	-2,18	-2,04	-1,92	-1,79	-1,56	-1,35	-1,19	-1,05	-1,09	-1,00	-0,81	-0,74	-0,67	-0,62	-0,57	-0,52	-0,49	-0,45		
160	I	-6,99	-5,83	-4,99	-4,37	-3,88	-3,49	-3,18	-2,91	-2,69	-2,49	-2,33	-2,18	-2,05	-1,86	-1,67	-1,51	-1,37	-1,25	-1,14	-1,05	-0,97	-0,90	-0,83	-0,77	-0,72	-0,67	-0,63	-0,59		
	II	-6,99	-5,83	-4,99	-4,37	-3,88	-3,49	-3,18	-2,91	-2,69	-2,49	-2,33	-2,18	-2,05	-1,86	-1,67	-1,51	-1,37	-1,25	-1,14	-1,05	-0,97	-0,90	-0,83	-0,77	-0,72	-0,67	-0,63	-0,59		
	III	-6,99	-5,83	-4,99	-4,37	-3,88	-3,49	-3,18	-2,91	-2,69	-2,49	-2,33	-2,18	-2,05	-1,80	-1,54	-1,33	-1,16	-1,02	-0,98	-0,88	-0,79	-0,72	-0,65	-0,60	-0,55	-0,51	-0,47	-0,43		
180	I	-7,87	-6,56	-5,62	-4,92	-4,37	-3,94	-3,58	-3,28	-3,03	-2,81	-2,62	-2,46	-2,22	-1,98	-1,78	-1,60	-1,45	-1,32	-1,21	-1,11	-1,02	-0,96	-0,89	-0,82	-0,77	-0,72	-0,67	-0,63		
	II	-7,87	-6,56	-5,62	-4,92	-4,37	-3,94	-3,58	-3,28	-3,03	-2,81	-2,62	-2,46	-2,22	-1,98	-1,78	-1,60	-1,45	-1,32	-1,21	-1,11	-1,02	-0,96	-0,89	-0,82	-0,77	-0,72	-0,67	-0,63		
	III	-7,87	-6,56	-5,62	-4,92	-4,37	-3,94	-3,58	-3,28	-3,03	-2,81	-2,62	-2,46	-2,14	-1,79	-1,52	-1,30	-1,13	-1,32	-0,94	-0,84	-0,75	-0,68	-0,62	-0,56	-0,51	-0,47	-0,43	-0,40		
200	I	-8,76	-7,30	-6,25	-5,47	-4,86	-4,38	-3,98	-3,65	-3,37	-3,12	-2,92	-2,65	-2,34	-2,09	-1,88	-1,69	-1,53	-1,40	-1,28	-1,17	-1,08	-0,99	-0,94	-0,87	-0,81	-0,76	-0,71	-0,66		
	II	-8,76	-7,30	-6,25	-5,47	-4,86	-4,38	-3,98	-3,65	-3,37	-3,12	-2,92	-2,65	-2,34	-2,09	-1,88	-1,69	-1,53	-1,40	-1,28	-1,17	-1,08	-0,99	-0,94	-0,87	-0,81	-0,76	-0,71	-0,66		
	III	-8,76	-7,30	-6,25	-5,47	-4,86	-4,38	-3,98	-3,65	-3,37	-3,12	-2,92	-2,56	-2,09	-1,73	-1,44	-1,22	-1,04	-0,99	-0,87	-0,77	-0,68	-0,61	-0,55	-0,50	-0,45	-0,41	-0,38	-0,35		
240	I	-10,51	-8,76	-7,51	-6,57	-5,84	-5,26	-4,78	-4,38	-4,04	-3,64	-3,17	-2,78	-2,46	-2,20	-1,97	-1,78	-1,61	-1,47	-1,34	-1,23	-1,14	-1,05	-0,98	-0,91	-0,85	-0,80	-0,74	-0,70		
	II	-10,51	-8,76	-7,51	-6,57	-5,84	-5,26	-4,78	-4,38	-4,04	-3,64	-3,17	-2,78	-2,46	-2,20	-1,97	-1,78	-1,61	-1,47	-1,34	-1,23	-1,14	-1,05	-0,98	-0,91	-0,85	-0,80	-0,74	-0,70		
	III	-10,51	-8,76	-7,51	-6,57	-5,84	-5,26	-4,78	-4,38	-4,04	-3,64	-2,93	-2,27	-1,77	-1,40	-1,12	-1,78	-0,86	-0,72	-0,61	-0,52	-0,45	-0,39	-0,34	-0,30	-0,26	-0,23	-0,21	-0,18		

*Colour groups: **I** - very light colours, **II** - light colours, **III** - dark colours*
Linear support has been assumed. Panels mounted by loop through connectors with aluminium or steel washers. Support width: min. 40mm.

Table 12. 1 span arrangement - maximum characteristic loads for BALEXTHERM-MW-W-PLUS sandwich panels with mineral wool core, in claddings of 0,50/0,50 mm thickness, profile types: M/L, 40mm outer support width. Direction of force - TO THE SUPPORT

BALEXTHERM MW-W-PLUS																														
Core thickness	Colour group	Maximum loads [kN/m²] for the span L[m]																												
		1,25	1,50	1,75	2,00	2,25	2,50	2,75	3,00	3,25	3,50	3,75	4,00	4,25	4,50	4,75	5,00	5,25	5,50	5,75	6,00	6,25	6,50	6,75	7,00	7,25	7,50	7,75	8,00
80	I	3,04	2,53	2,17	1,90	1,69	1,52	1,38	1,26	1,17	1,08	1,01	0,96	0,90	0,85	0,81	0,76	0,73	0,69	0,65	0,59	0,55	0,50	0,47	0,43	0,40	0,38	0,35	0,31
	II	3,04	2,53	2,17	1,90	1,69	1,52	1,38	1,26	1,17	1,08	1,01	0,96	0,90	0,85	0,81	0,76	0,73	0,69	0,65	0,59	0,55	0,50	0,47	0,43	0,40	0,38	0,35	0,31
	III	3,04	2,53	2,17	1,90	1,69	1,52	1,38	1,26	1,17	1,08	1,01	0,96	0,90	0,85	0,81	0,76	0,73	0,69	0,65	0,59	0,55	0,50	0,47	0,43	0,40	0,38	0,35	0,31
100	I	3,04	2,53	2,17	1,90	1,69	1,52	1,38	1,26	1,17	1,08	1,01	0,96	0,90	0,85	0,81	0,76	0,73	0,69	0,66	0,64	0,61	0,59	0,55	0,52	0,48	0,45	0,42	0,37
	II	3,04	2,53	2,17	1,90	1,69	1,52	1,38	1,26	1,17	1,08	1,01	0,96	0,90	0,85	0,81	0,76	0,73	0,69	0,66	0,64	0,61	0,59	0,55	0,52	0,48	0,45	0,42	0,37
	III	3,04	2,53	2,17	1,90	1,69	1,52	1,38	1,26	1,17	1,08	1,01	0,96	0,90	0,85	0,81	0,76	0,73	0,69	0,66	0,64	0,61	0,59	0,55	0,52	0,48	0,45	0,42	0,37
120	I	3,04	2,53	2,17	1,90	1,69	1,52	1,38	1,26	1,17	1,08	1,01	0,96	0,90	0,85	0,81	0,76	0,73	0,69	0,66	0,64	0,61	0,59	0,57	0,54	0,53	0,51	0,48	0,45
	II	3,04	2,53	2,17	1,90	1,69	1,52	1,38	1,26	1,17	1,08	1,01	0,96	0,90	0,85	0,81	0,76	0,73	0,69	0,66	0,64	0,61	0,59	0,57	0,54	0,53	0,51	0,48	0,45
	III	3,04	2,53	2,17	1,90	1,69	1,52	1,38	1,26	1,17	1,08	1,01	0,96	0,90	0,85	0,81	0,76	0,73	0,69	0,66	0,64	0,61	0,59	0,57	0,54	0,53	0,51	0,48	0,45
150	I	3,04	2,53	2,17	1,90	1,69	1,52	1,38	1,26	1,17	1,08	1,01	0,96	0,90	0,85	0,81	0,76	0,73	0,69	0,66	0,64	0,61	0,59	0,57	0,54	0,53	0,51	0,49	0,48
	II	3,04	2,53	2,17	1,90	1,69	1,52	1,38	1,26	1,17	1,08	1,01	0,96	0,90	0,85	0,81	0,76	0,73	0,69	0,66	0,64	0,61	0,59	0,57	0,54	0,53	0,51	0,49	0,48
	III	3,04	2,53	2,17	1,90	1,69	1,52	1,38	1,26	1,17	1,08	1,01	0,96	0,90	0,85	0,81	0,76	0,73	0,69	0,66	0,64	0,61	0,59	0,57	0,54	0,53	0,51	0,49	0,48
160	I	3,04	2,53	2,17	1,90	1,69	1,52	1,38	1,26	1,17	1,08	1,01	0,96	0,90	0,85	0,81	0,76	0,73	0,69	0,66	0,64	0,61	0,59	0,57	0,54	0,53	0,51	0,49	0,48
	II	3,04	2,53	2,17	1,90	1,69	1,52	1,38	1,26	1,17	1,08	1,01	0,96	0,90	0,85	0,81	0,76	0,73	0,69	0,66	0,64	0,61	0,59	0,57	0,54	0,53	0,51	0,49	0,48
	III	3,04	2,53	2,17	1,90	1,69	1,52	1,38	1,26	1,17	1,08	1,01	0,96	0,90	0,85	0,81	0,76	0,73	0,69	0,66	0,64	0,61	0,59	0,57	0,54	0,53	0,51	0,49	0,48
180	I	3,04	2,53	2,17	1,90	1,69	1,52	1,38	1,26	1,17	1,08	1,01	0,96	0,90	0,85	0,81	0,76	0,73	0,69	0,66	0,64	0,61	0,59	0,57	0,54	0,53	0,51	0,49	0,48
	II	3,04	2,53	2,17	1,90	1,69	1,52	1,38	1,26	1,17	1,08	1,01	0,96	0,90	0,85	0,81	0,76	0,73	0,69	0,66	0,64	0,61	0,59	0,57	0,54	0,53	0,51	0,49	0,48
	III	3,04	2,53	2,17	1,90	1,69	1,52	1,38	1,26	1,17	1,08	1,01	0,96	0,90	0,85	0,81	0,76	0,73	0,69	0,66	0,64	0,61	0,59	0,57	0,54	0,53	0,51	0,49	0,48
200	I	2,80	2,33	2,00	1,75	1,55	1,40	1,27	1,16	1,07	1,07	0,94	0,88	0,83	0,78	0,74	0,70	0,67	0,64	0,61	0,58	0,56	0,54	0,52	0,50	0,48	0,47	0,45	0,44
	II	2,80	2,33	2,00	1,75	1,55	1,40	1,27	1,16	1,07	1,07	0,94	0,88	0,83	0,78	0,74	0,70	0,67	0,64	0,61	0,58	0,56	0,54	0,52	0,50	0,48	0,47	0,45	0,44
	III	2,80	2,33	2,00	1,75	1,55	1,40	1,27	1,16	1,07	1,07	0,94	0,88	0,83	0,78	0,74	0,70	0,67	0,64	0,61	0,58	0,56	0,54	0,52	0,50	0,48	0,47	0,45	0,44

Colour groups: ***I*** *- very light colours,* ***II*** *- light colours,* ***III*** *- dark colours*
Linear support has been assumed. Panels mounted by loop through connectors with aluminium or steel washers. Support width: min. 40mm.

Table 13. 2 span arrangement - maximum characteristic loads for BALEXTHERM-MW-W-PLUS sandwich panels with mineral wool core, in claddings of 0,50/0,50 mm thickness, profile types: M/L, 40mm outer support width, 60mm inner support width.
Direction of force - TO THE SUPPORT

BALEXTHERM MW-W-PLUS																														
Core thickness	Colour group	Maximum loads [kN/m²] for the span L[m]																												
		1,25	1,50	1,75	2,00	2,25	2,50	2,75	3,00	3,25	3,50	3,75	4,00	4,25	4,50	4,75	5,00	5,25	5,50	5,75	6,00	6,25	6,50	6,75	7,00	7,25	7,50	7,75	8,00
80	I	2,28	1,90	1,63	1,42	1,26	1,14	1,03	0,96	0,88	0,82	0,76	0,72	0,67	0,64	0,60	0,57	0,54	0,52	0,50	0,48	0,46	0,44	0,42	0,41	0,39	0,38	0,35	0,33
	II	2,28	1,90	1,63	1,42	1,26	1,14	1,03	0,96	0,88	0,82	0,76	0,72	0,67	0,64	0,60	0,57	0,54	0,52	0,50	0,48	0,46	0,44	0,42	0,41	0,39	0,38	0,35	0,33
	III	2,28	1,90	1,63	1,42	1,26	1,14	1,03	0,96	0,88	0,82	0,76	0,72	0,67	0,64	0,60	0,57	0,54	0,52	0,50	0,48	0,46	0,44	0,42	0,41	0,39	0,38	0,35	0,33
100	I	2,28	1,90	1,63	1,42	1,26	1,14	1,03	0,96	0,88	0,82	0,76	0,72	0,67	0,64	0,60	0,57	0,54	0,52	0,50	0,48	0,46	0,44	0,42	0,41	0,39	0,38	0,37	0,36
	II	2,28	1,90	1,63	1,42	1,26	1,14	1,03	0,96	0,88	0,82	0,76	0,72	0,67	0,64	0,60	0,57	0,54	0,52	0,50	0,48	0,46	0,44	0,42	0,41	0,39	0,38	0,37	0,36
	III	2,28	1,90	1,63	1,42	1,26	1,14	1,03	0,96	0,88	0,82	0,76	0,72	0,67	0,64	0,60	0,57	0,54	0,52	0,50	0,48	0,46	0,44	0,42	0,41	0,39	0,38	0,37	0,36
120	I	2,28	1,90	1,63	1,42	1,26	1,14	1,03	0,96	0,88	0,82	0,76	0,72	0,67	0,64	0,60	0,57	0,54	0,52	0,50	0,48	0,46	0,44	0,42	0,41	0,39	0,38	0,37	0,36
	II	2,28	1,90	1,63	1,42	1,26	1,14	1,03	0,96	0,88	0,82	0,76	0,72	0,67	0,64	0,60	0,57	0,54	0,52	0,50	0,48	0,46	0,44	0,42	0,41	0,39	0,38	0,37	0,36
	III	2,28	1,90	1,63	1,42	1,26	1,14	1,03	0,96	0,88	0,82	0,76	0,72	0,67	0,64	0,60	0,57	0,54	0,52	0,50	0,48	0,46	0,44	0,42	0,41	0,39	0,38	0,37	0,36
150	I	2,28	1,90	1,63	1,42	1,26	1,14	1,03	0,96	0,88	0,82	0,76	0,72	0,67	0,64	0,60	0,57	0,54	0,52	0,50	0,48	0,46	0,44	0,42	0,41	0,39	0,38	0,37	0,36
	II	2,28	1,90	1,63	1,42	1,26	1,14	1,03	0,96	0,88	0,82	0,76	0,72	0,67	0,64	0,60	0,57	0,54	0,52	0,50	0,48	0,46	0,44	0,42	0,41	0,39	0,38	0,37	0,36
	III	2,28	1,90	1,63	1,42	1,26	1,14	1,03	0,96	0,88	0,82	0,76	0,72	0,67	0,64	0,60	0,57	0,54	0,52	0,50	0,48	0,46	0,44	0,42	0,41	0,39	0,38	0,37	0,36
160	I	2,28	1,90	1,63	1,42	1,26	1,14	1,03	0,96	0,88	0,82	0,76	0,72	0,67	0,64	0,60	0,57	0,54	0,52	0,50	0,48	0,46	0,44	0,42	0,41	0,39	0,38	0,37	0,36
	II	2,28	1,90	1,63	1,42	1,26	1,14	1,03	0,96	0,88	0,82	0,76	0,72	0,67	0,64	0,60	0,57	0,54	0,52	0,50	0,48	0,46	0,44	0,42	0,41	0,39	0,38	0,37	0,36
	III	2,28	1,90	1,63	1,42	1,26	1,14	1,03	0,96	0,88	0,82	0,76	0,72	0,67	0,64	0,60	0,57	0,54	0,52	0,50	0,48	0,46	0,44	0,42	0,41	0,39	0,38	0,37	0,36
180	I	2,28	1,90	1,63	1,42	1,26	1,14	1,03	0,96	0,88	0,82	0,76	0,72	0,67	0,64	0,60	0,57	0,54	0,52	0,50	0,48	0,46	0,44	0,42	0,41	0,39	0,38	0,37	0,36
	II	2,28	1,90	1,63	1,42	1,26	1,14	1,03	0,96	0,88	0,82	0,76	0,72	0,67	0,64	0,60	0,57	0,54	0,52	0,50	0,48	0,46	0,44	0,42	0,41	0,39	0,38	0,37	0,36
	III	2,28	1,90	1,63	1,42	1,26	1,14	1,03	0,96	0,88	0,82	0,76	0,72	0,67	0,64	0,60	0,57	0,54	0,52	0,50	0,48	0,46	0,44	0,42	0,41	0,39	0,38	0,37	0,36
200	I	2,10	1,75	1,50	1,31	1,16	1,05	0,96	0,88	0,81	0,75	0,70	0,66	0,62	0,58	0,55	0,53	0,50	0,48	0,46	0,44	0,42	0,40	0,39	0,37	0,36	0,35	0,34	0,33
	II	2,10	1,75	1,50	1,31	1,16	1,05	0,96	0,88	0,81	0,75	0,70	0,66	0,62	0,58	0,55	0,53	0,50	0,48	0,46	0,44	0,42	0,40	0,39	0,37	0,36	0,35	0,34	0,33
	III	2,10	1,75	1,50	1,31	1,16	1,05	0,96	0,88	0,81	0,75	0,70	0,66	0,62	0,58	0,55	0,53	0,50	0,48	0,46	0,44	0,42	0,40	0,39	0,37	0,36	0,35	0,34	0,33

Colour groups: ***I*** *- very light colours,* ***II*** *- light colours,* ***III*** *- dark colours*
Linear support has been assumed. Panels mounted by loop through connectors with aluminium or steel washers. Support width: min. 40mm.

Table 14. 3 span arrangement - maximum characteristic loads for BALEXTHERM-MW-W-PLUS sandwich panels with mineral wool core, in claddings of 0,50/0,50 mm thickness, profile types: M/L, 40mm outer support width, 60mm inner support width.
Direction of force - TO THE SUPPORT

BALEXTHERM MW-W-PLUS																														
Core thickness	Colour group	Maximum loads [kN/m²] for the span L[m]																												
		1,25	1,50	1,75	2,00	2,25	2,50	2,75	3,00	3,25	3,50	3,75	4,00	4,25	4,50	4,75	5,00	5,25	5,50	5,75	6,00	6,25	6,50	6,75	7,00	7,25	7,50	7,75	8,00
80	I	2,28	1,90	1,63	1,42	1,26	1,14	1,03	0,96	0,88	0,82	0,76	0,72	0,67	0,64	0,60	0,57	0,54	0,52	0,50	0,48	0,46	0,44	0,42	0,41	0,39	0,38	0,35	0,33
	II	2,28	1,90	1,63	1,42	1,26	1,14	1,03	0,96	0,88	0,82	0,76	0,72	0,67	0,64	0,60	0,57	0,54	0,52	0,50	0,48	0,46	0,44	0,42	0,41	0,39	0,38	0,35	0,33
	III	2,28	1,90	1,63	1,42	1,26	1,14	1,03	0,96	0,88	0,82	0,76	0,72	0,67	0,64	0,60	0,57	0,54	0,52	0,50	0,48	0,46	0,44	0,42	0,41	0,39	0,38	0,35	0,33
100	I	2,28	1,90	1,63	1,42	1,26	1,14	1,03	0,96	0,88	0,82	0,76	0,72	0,67	0,64	0,60	0,57	0,54	0,52	0,50	0,48	0,46	0,44	0,42	0,41	0,39	0,38	0,37	0,36
	II	2,28	1,90	1,63	1,42	1,26	1,14	1,03	0,96	0,88	0,82	0,76	0,72	0,67	0,64	0,60	0,57	0,54	0,52	0,50	0,48	0,46	0,44	0,42	0,41	0,39	0,38	0,37	0,36
	III	2,28	1,90	1,63	1,42	1,26	1,14	1,03	0,96	0,88	0,82	0,76	0,72	0,67	0,64	0,60	0,57	0,54	0,52	0,50	0,48	0,46	0,44	0,42	0,41	0,39	0,38	0,37	0,36
120	I	2,28	1,90	1,63	1,42	1,26	1,14	1,03	0,96	0,88	0,82	0,76	0,72	0,67	0,64	0,60	0,57	0,54	0,52	0,50	0,48	0,46	0,44	0,42	0,41	0,39	0,38	0,37	0,36
	II	2,28	1,90	1,63	1,42	1,26	1,14	1,03	0,96	0,88	0,82	0,76	0,72	0,67	0,64	0,60	0,57	0,54	0,52	0,50	0,48	0,46	0,44	0,42	0,41	0,39	0,38	0,37	0,36
	III	2,28	1,90	1,63	1,42	1,26	1,14	1,03	0,96	0,88	0,82	0,76	0,72	0,67	0,64	0,60	0,57	0,54	0,52	0,50	0,48	0,46	0,44	0,42	0,41	0,39	0,38	0,37	0,36
150	I	2,28	1,90	1,63	1,42	1,26	1,14	1,03	0,96	0,88	0,82	0,76	0,72	0,67	0,64	0,60	0,57	0,54	0,52	0,50	0,48	0,46	0,44	0,42	0,41	0,39	0,38	0,37	0,36
	II	2,28	1,90	1,63	1,42	1,26	1,14	1,03	0,96	0,88	0,82	0,76	0,72	0,67	0,64	0,60	0,57	0,54	0,52	0,50	0,48	0,46	0,44	0,42	0,41	0,39	0,38	0,37	0,36
	III	2,28	1,90	1,63	1,42	1,26	1,14	1,03	0,96	0,88	0,82	0,76	0,72	0,67	0,64	0,60	0,57	0,54	0,52	0,50	0,48	0,46	0,44	0,42	0,41	0,39	0,38	0,37	0,36
160	I	2,28	1,90	1,63	1,42	1,26	1,14	1,03	0,96	0,88	0,82	0,76	0,72	0,67	0,64	0,60	0,57	0,54	0,52	0,50	0,48	0,46	0,44	0,42	0,41	0,39	0,38	0,37	0,36
	II	2,28	1,90	1,63	1,42	1,26	1,14	1,03	0,96	0,88	0,82	0,76	0,72	0,67	0,64	0,60	0,57	0,54	0,52	0,50	0,48	0,46	0,44	0,42	0,41	0,39	0,38	0,37	0,36
	III	2,28	1,90	1,63	1,42	1,26	1,14	1,03	0,96	0,88	0,82	0,76	0,72	0,67	0,64	0,60	0,57	0,54	0,52	0,50	0,48	0,46	0,44	0,42	0,41	0,39	0,38	0,37	0,36
180	I	2,28	1,90	1,63	1,42	1,26	1,14	1,03	0,96	0,88	0,82	0,76	0,72	0,67	0,64	0,60	0,57	0,54	0,52	0,50	0,48	0,46	0,44	0,42	0,41	0,39	0,38	0,37	0,36
	II	2,28	1,90	1,63	1,42	1,26	1,14	1,03	0,96	0,88	0,82	0,76	0,72	0,67	0,64	0,60	0,57	0,54	0,52	0,50	0,48	0,46	0,44	0,42	0,41	0,39	0,38	0,37	0,36
	III	2,28	1,90	1,63	1,42	1,26	1,14	1,03	0,96	0,88	0,82	0,76	0,72	0,67	0,64	0,60	0,57	0,54	0,52	0,50	0,48	0,46	0,44	0,42	0,41	0,39	0,38	0,37	0,36
200	I	2,10	1,75	1,50	1,31	1,16	1,05	0,96	0,88	0,81	0,75	0,70	0,66	0,62	0,58	0,55	0,53	0,50	0,48	0,46	0,44	0,42	0,40	0,39	0,37	0,36	0,35	0,34	0,33
	II	2,10	1,75	1,50	1,31	1,16	1,05	0,96	0,88	0,81	0,75	0,70	0,66	0,62	0,58	0,55	0,53	0,50	0,48	0,46	0,44	0,42	0,40	0,39	0,37	0,36	0,35	0,34	0,33
	III	2,10	1,75	1,50	1,31	1,16	1,05	0,96	0,88	0,81	0,75	0,70	0,66	0,62	0,58	0,55	0,53	0,50	0,48	0,46	0,44	0,42	0,40	0,39	0,37	0,36	0,35	0,34	0,33

Colour groups: ***I*** *- very light colours,* ***II*** *- light colours,* ***III*** *- dark colours*
Linear support has been assumed. Panels mounted by loop through connectors with aluminium or steel washers. Support width: min. 40mm.

Table 15. 1 span arrangement - maximum characteristic loads for BALEXTHERM-MW-W-PLUS sandwich panels with mineral wool core, in claddings of 0,50/0,50 mm thickness, profile types: M/L, 40mm outer support width.
Direction of force - FROM THE SUPPORT

BALEXTHERM MW-W-PLUS																														
Core thickness	Colour group	Maximum loads [kN/m²] for the span L[m]																												
		1,25	1,50	1,75	2,00	2,25	2,50	2,75	3,00	3,25	3,50	3,75	4,00	4,25	4,50	4,75	5,00	5,25	5,50	5,75	6,00	6,25	6,50	6,75	7,00	7,25	7,50	7,75	8,00
80	I	-3,47	-2,89	-2,48	-2,17	-1,92	-1,73	-1,57	-1,44	-1,33	-1,23	-1,15	-1,08	-1,02	-0,97	-0,92	-0,87	-0,83	-0,79	-0,72	-0,66	-0,61	-0,57	-0,52	-0,49	-0,45	-0,42	-0,39	-0,36
	II	-3,47	-2,89	-2,48	-2,17	-1,92	-1,73	-1,57	-1,44	-1,33	-1,23	-1,15	-1,08	-1,02	-0,97	-0,92	-0,87	-0,83	-0,79	-0,72	-0,66	-0,61	-0,57	-0,52	-0,48	-0,43	-0,39	-0,35	-0,31
	III	-3,47	-2,89	-2,48	-2,17	-1,92	-1,73	-1,57	-1,44	-1,33	-1,23	-1,15	-1,08	-1,02	-0,97	-0,92	-0,87	-0,83	-0,79	-0,72	-0,66	-0,55	-0,46	-0,39	-0,32	-0,26	-0,21	-0,17	-0,14
100	I	-4,35	-3,63	-3,11	-2,72	-2,41	-2,17	-1,97	-1,81	-1,67	-1,55	-1,45	-1,36	-1,28	-1,20	-1,14	-1,08	-1,02	-0,94	-0,86	-0,79	-0,72	-0,67	-0,62	-0,58	-0,54	-0,50	-0,47	-0,44
	II	-4,35	-3,63	-3,11	-2,72	-2,41	-2,17	-1,97	-1,81	-1,67	-1,55	-1,45	-1,36	-1,28	-1,20	-1,14	-1,08	-1,02	-0,94	-0,86	-0,79	-0,72	-0,67	-0,62	-0,58	-0,54	-0,50	-0,47	-0,44
	III	-4,35	-3,63	-3,11	-2,72	-2,41	-2,17	-1,97	-1,81	-1,67	-1,55	-1,45	-1,36	-1,28	-1,20	-1,14	-1,08	-1,02	-0,94	-0,86	-0,79	-0,72	-0,67	-0,62	-0,58	-0,54	-0,50	-0,47	-0,42
120	I	-5,24	-4,36	-3,74	-3,27	-2,90	-2,61	-2,38	-2,18	-2,01	-1,86	-1,74	-1,63	-1,53	-1,45	-1,37	-1,27	-1,15	-1,05	-0,97	-0,89	-0,82	-0,76	-0,70	-0,65	-0,61	-0,57	-0,53	-0,50
	II	-5,24	-4,36	-3,74	-3,27	-2,90	-2,61	-2,38	-2,18	-2,01	-1,86	-1,74	-1,63	-1,53	-1,45	-1,37	-1,27	-1,15	-1,05	-0,97	-0,89	-0,82	-0,76	-0,70	-0,65	-0,61	-0,57	-0,53	-0,50
	III	-5,24	-4,36	-3,74	-3,27	-2,90	-2,61	-2,38	-2,18	-2,01	-1,86	-1,74	-1,63	-1,53	-1,45	-1,37	-1,27	-1,15	-1,05	-0,97	-0,89	-0,82	-0,76	-0,70	-0,65	-0,61	-0,57	-0,53	-0,50
150	I	-6,56	-5,46	-4,68	-4,10	-3,64	-3,27	-2,98	-2,73	-2,52	-2,34	-2,18	-2,04	-1,92	-1,79	-1,60	-1,45	-1,31	-1,19	-1,09	-1,00	-0,93	-0,86	-0,80	-0,74	-0,69	-0,65	-0,61	-0,57
	II	-6,56	-5,46	-4,68	-4,10	-3,64	-3,27	-2,98	-2,73	-2,52	-2,34	-2,18	-2,04	-1,92	-1,79	-1,60	-1,45	-1,31	-1,19	-1,09	-1,00	-0,93	-0,86	-0,80	-0,74	-0,69	-0,65	-0,61	-0,57
	III	-6,56	-5,46	-4,68	-4,10	-3,64	-3,27	-2,98	-2,73	-2,52	-2,34	-2,18	-2,04	-1,92	-1,79	-1,60	-1,45	-1,31	-1,19	-1,09	-1,00	-0,93	-0,86	-0,80	-0,74	-0,69	-0,65	-0,61	-0,57
160	I	-7,00	-5,83	-5,00	-4,37	-3,88	-3,50	-3,18	-2,91	-2,69	-2,49	-2,33	-2,18	-2,05	-1,86	-1,67	-1,51	-1,37	-1,25	-1,14	-1,05	-0,97	-0,90	-0,83	-0,77	-0,72	-0,67	-0,63	-0,59
	II	-7,00	-5,83	-5,00	-4,37	-3,88	-3,50	-3,18	-2,91	-2,69	-2,49	-2,33	-2,18	-2,05	-1,86	-1,67	-1,51	-1,37	-1,25	-1,14	-1,05	-0,97	-0,90	-0,83	-0,77	-0,72	-0,67	-0,63	-0,59
	III	-7,00	-5,83	-5,00	-4,37	-3,88	-3,50	-3,18	-2,91	-2,69	-2,49	-2,33	-2,18	-2,05	-1,86	-1,67	-1,51	-1,37	-1,25	-1,14	-1,05	-0,97	-0,90	-0,83	-0,77	-0,72	-0,67	-0,63	-0,59
180	I	-7,88	-6,56	-5,62	-4,92	-4,37	-3,94	-3,58	-3,28	-3,03	-2,81	-2,62	-2,46	-2,22	-1,98	-1,78	-1,60	-1,45	-1,32	-1,21	-1,11	-1,02	-0,96	-0,89	-0,82	-0,77	-0,72	-0,67	-0,63
	II	-7,88	-6,56	-5,62	-4,92	-4,37	-3,94	-3,58	-3,28	-3,03	-2,81	-2,62	-2,46	-2,22	-1,98	-1,78	-1,60	-1,45	-1,32	-1,21	-1,11	-1,02	-0,96	-0,89	-0,82	-0,77	-0,72	-0,67	-0,63
	III	-7,88	-6,56	-5,62	-4,92	-4,37	-3,94	-3,58	-3,28	-3,03	-2,81	-2,62	-2,46	-2,22	-1,98	-1,78	-1,60	-1,45	-1,32	-1,21	-1,11	-1,02	-0,96	-0,89	-0,82	-0,77	-0,72	-0,67	-0,63
200	I	-8,76	-7,30	-6,25	-5,47	-4,86	-4,38	-3,98	-3,65	-3,37	-3,12	-2,92	-2,65	-2,34	-2,09	-1,88	-1,69	-1,53	-1,40	-1,28	-1,17	-1,08	-1,00	-0,94	-0,87	-0,81	-0,76	-0,71	-0,66
	II	-8,76	-7,30	-6,25	-5,47	-4,86	-4,38	-3,98	-3,65	-3,37	-3,12	-2,92	-2,65	-2,34	-2,09	-1,88	-1,69	-1,53	-1,40	-1,28	-1,17	-1,08	-1,00	-0,94	-0,87	-0,81	-0,76	-0,71	-0,66
	III	-8,76	-7,30	-6,25	-5,47	-4,86	-4,38	-3,98	-3,65	-3,37	-3,12	-2,92	-2,65	-2,34	-2,09	-1,88	-1,69	-1,53	-1,40	-1,28	-1,17	-1,08	-1,00	-0,94	-0,87	-0,81	-0,76	-0,71	-0,66

Colour groups: ***I*** *- very light colours,* ***II*** *- light colours,* ***III*** *- dark colours*
Linear support has been assumed. Panels mounted by loop through connectors with aluminium or steel washers. Support width: min. 40mm.

Table 16. 2 span arrangement - maximum characteristic loads for BALEXTHERM-MW-W-PLUS sandwich panels with mineral wool core, in claddings of 0,50/0,50 mm thickness, profile types: M/L, 40mm outer support width, 60mm inner support width.
Direction of force - FROM THE SUPPORT

BALEXTHERM MW-W-PLUS																															
Core thickness	Colour group	Maximum loads [kN/m²] for the span L[m]																													
		1,25	1,50	1,75	2,00	2,25	2,50	2,75	3,00	3,25	3,50	3,75	4,00	4,25	4,50	4,75	5,00	5,25	5,50	5,75	6,00	6,25	6,50	6,75	7,00	7,25	7,50	7,75	8,00
80	I	-3,47	-2,89	-2,47	-2,16	-1,92	-1,73	-1,57	-1,44	-1,33	-1,23	-1,15	-1,08	-1,02	-0,97	-0,92	-0,87	-0,83	-0,79	-0,72	-0,66	-0,61	-0,57	-0,52	-0,49	-0,45	-0,42	-0,40	-0,37
	II	-3,47	-2,89	-2,47	-2,16	-1,92	-1,73	-1,57	-1,44	-1,33	-1,23	-1,15	-1,08	-1,02	-0,97	-0,92	-0,87	-0,83	-0,79	-0,72	-0,66	-0,61	-0,57	-0,52	-0,49	-0,45	-0,42	-0,40	-0,37
	III	-3,47	-2,89	-2,47	-2,16	-1,92	-1,73	-1,57	-1,44	-1,33	-1,23	-1,15	-1,08	-1,02	-0,97	-0,92	-0,84	-0,73	-0,65	-0,57	-0,51	-0,46	-0,41	-0,38	-0,34	-0,31	-0,29	-0,27	-0,25
100	I	-4,35	-3,62	-3,10	-2,72	-2,41	-2,17	-1,97	-1,81	-1,67	-1,55	-1,45	-1,36	-1,28	-1,20	-1,14	-1,08	-1,02	-0,94	-0,86	-0,79	-0,72	-0,67	-0,62	-0,58	-0,54	-0,50	-0,47	-0,44
	II	-4,35	-3,62	-3,10	-2,72	-2,41	-2,17	-1,97	-1,81	-1,67	-1,55	-1,45	-1,36	-1,28	-1,20	-1,14	-1,08	-1,02	-0,94	-0,86	-0,79	-0,72	-0,67	-0,62	-0,58	-0,54	-0,50	-0,47	-0,44
	III	-4,35	-3,62	-3,10	-2,72	-2,41	-2,17	-1,97	-1,81	-1,67	-1,55	-1,45	-1,36	-1,28	-1,20	-1,07	-0,96	-0,83	-0,72	-0,64	-0,56	-0,50	-0,45	-0,40	-0,36	-0,33	-0,30	-0,28	-0,25
120	I	-5,24	-4,36	-3,74	-3,27	-2,90	-2,61	-2,38	-2,18	-2,01	-1,86	-1,74	-1,63	-1,53	-1,45	-1,37	-1,27	-1,15	-1,05	-0,97	-0,89	-0,82	-0,76	-0,70	-0,65	-0,61	-0,57	-0,53	-0,50
	II	-5,24	-4,36	-3,74	-3,27	-2,90	-2,61	-2,38	-2,18	-2,01	-1,86	-1,74	-1,63	-1,53	-1,45	-1,37	-1,27	-1,15	-1,05	-0,97	-0,89	-0,82	-0,76	-0,70	-0,65	-0,61	-0,57	-0,53	-0,50
	III	-5,24	-4,36	-3,74	-3,27	-2,90	-2,61	-2,38	-2,18	-2,01	-1,86	-1,74	-1,63	-1,53	-1,31	-1,08	-0,98	-0,83	-0,72	-0,62	-0,54	-0,48	-0,43	-0,38	-0,34	-0,31	-0,28	-0,25	-0,23
150	I	-6,55	-5,46	-4,68	-4,09	-3,64	-3,27	-2,98	-2,73	-2,52	-2,34	-2,18	-2,04	-1,92	-1,79	-1,60	-1,45	-1,31	-1,19	-1,09	-1,00	-0,93	-0,86	-0,80	-0,74	-0,69	-0,65	-0,61	-0,57
	II	-6,55	-5,46	-4,68	-4,09	-3,64	-3,27	-2,98	-2,73	-2,52	-2,34	-2,18	-2,04	-1,92	-1,79	-1,60	-1,45	-1,31	-1,19	-1,09	-1,00	-0,93	-0,86	-0,80	-0,74	-0,69	-0,64	-0,59	-0,54
	III	-6,55	-5,46	-4,68	-4,09	-3,64	-3,27	-2,98	-2,73	-2,52	-2,34	-2,18	-2,04	-1,68	-1,33	-1,06	-0,94	-0,78	-0,65	-0,55	-0,47	-0,40	-0,34	-0,30	-0,26	-0,23	-0,20	-0,18	-0,16
160	I	-6,99	-5,83	-4,99	-4,37	-3,88	-3,49	-3,18	-2,91	-2,69	-2,49	-2,33	-2,18	-2,05	-1,86	-1,67	-1,51	-1,37	-1,25	-1,14	-1,05	-0,97	-0,90	-0,83	-0,77	-0,72	-0,67	-0,63	-0,59
	II	-6,99	-5,83	-4,99	-4,37	-3,88	-3,49	-3,18	-2,91	-2,69	-2,49	-2,33	-2,18	-2,05	-1,86	-1,67	-1,51	-1,37	-1,25	-1,14	-1,05	-0,97	-0,90	-0,83	-0,77	-0,71	-0,65	-0,59	-0,55
	III	-6,99	-5,83	-4,99	-4,37	-3,88	-3,49	-3,18	-2,91	-2,69	-2,49	-2,33	-2,18	-1,72	-1,35	-1,06	-0,94	-0,77	-0,64	-0,53	-0,44	-0,37	-0,32	-0,27	-0,23	-0,20	-0,17	-0,15	-0,13
180	I	-7,87	-6,56	-5,62	-4,92	-4,37	-3,94	-3,58	-3,28	-3,03	-2,81	-2,62	-2,46	-2,22	-1,98	-1,78	-1,60	-1,45	-1,32	-1,21	-1,11	-1,02	-0,96	-0,89	-0,82	-0,77	-0,72	-0,67	-0,63
	II	-7,87	-6,56	-5,62	-4,92	-4,37	-3,94	-3,58	-3,28	-3,03	-2,81	-2,62	-2,46	-2,22	-1,98	-1,78	-1,60	-1,45	-1,32	-1,21	-1,11	-1,02	-0,96	-0,88	-0,80	-0,72	-0,66	-0,60	-0,55
	III	-7,87	-6,56	-5,62	-4,92	-4,37	-3,94	-3,58	-3,28	-3,03	-2,81	-2,62	-2,41	-1,84	-1,41	-1,09	-0,95	-0,76	-0,61	-0,50	-0,41	-0,33	-0,27	-0,22	-0,18	-0,15	-0,13	-0,10	-0,08
200	I	-8,76	-7,30	-6,25	-5,47	-4,86	-4,38	-3,98	-3,65	-3,37	-3,12	-2,92	-2,65	-2,34	-2,09	-1,88	-1,69	-1,53	-1,40	-1,28	-1,17	-1,08	-0,99	-0,94	-0,87	-0,81	-0,76	-0,71	-0,66
	II	-8,76	-7,30	-6,25	-5,47	-4,86	-4,38	-3,98	-3,65	-3,37	-3,12	-2,92	-2,65	-2,34	-2,09	-1,88	-1,69	-1,53	-1,40	-1,28	-1,17	-1,06	-0,99	-0,89	-0,80	-0,72	-0,65	-0,60	-0,54
	III	-8,76	-7,30	-6,25	-5,47	-4,86	-4,38	-3,98	-3,65	-3,37	-3,12	-2,92	-2,54	-1,90	-1,43	-1,07	-0,92	-0,72	-0,56	-0,44	-0,34	-0,26	-0,20	-0,16	-0,12	-0,09	-0,06	-0,04	-0,02

Colour groups: ***I*** *- very light colours,* ***II*** *- light colours,* ***III*** *- dark colours*
Linear support has been assumed. Panels mounted by loop through connectors with aluminium or steel washers. Support width: min. 40mm.

Table 17. 3 span arrangement - maximum characteristic loads for BALEXTHERM-MW-W-PLUS sandwich panels with mineral wool core, in claddings of 0,50/0,50 mm thickness, profile types: M/L, 40mm outer support width, 60mm inner support width.
Direction of force - FROM THE SUPPORT

BALEXTHERM MW-W-PLUS																															
Core thickness	Colour group	Maximum loads [kN/m²] for the span L[m]																													
		1,25	1,50	1,75	2,00	2,25	2,50	2,75	3,00	3,25	3,50	3,75	4,00	4,25	4,50	4,75	5,00	5,25	5,50	5,75	6,00	6,25	6,50	6,75	7,00	7,25	7,50	7,75	8,00
80	I	-3,47	-2,89	-2,47	-2,16	-1,92	-1,73	-1,57	-1,44	-1,33	-1,23	-1,15	-1,08	-1,02	-0,97	-0,92	-0,87	-0,83	-0,79	-0,72	-0,66	-0,61	-0,57	-0,52	-0,49	-0,45	-0,42	-0,40	-0,37
	II	-3,47	-2,89	-2,47	-2,16	-1,92	-1,73	-1,57	-1,44	-1,33	-1,23	-1,15	-1,08	-1,02	-0,97	-0,92	-0,87	-0,83	-0,79	-0,72	-0,66	-0,61	-0,57	-0,52	-0,49	-0,45	-0,42	-0,40	-0,37
	III	-3,47	-2,89	-2,47	-2,16	-1,92	-1,73	-1,57	-1,44	-1,33	-1,23	-1,15	-1,08	-1,02	-0,97	-0,92	-0,87	-0,83	-0,79	-0,72	-0,66	-0,61	-0,57	-0,52	-0,49	-0,45	-0,42	-0,40	-0,37
100	I	-4,35	-3,62	-3,10	-2,72	-2,41	-2,17	-1,97	-1,81	-1,67	-1,55	-1,45	-1,36	-1,28	-1,20	-1,14	-1,08	-1,02	-0,94	-0,86	-0,79	-0,72	-0,67	-0,62	-0,58	-0,54	-0,50	-0,47	-0,44
	II	-4,35	-3,62	-3,10	-2,72	-2,41	-2,17	-1,97	-1,81	-1,67	-1,55	-1,45	-1,36	-1,28	-1,20	-1,14	-1,08	-1,02	-0,94	-0,86	-0,79	-0,72	-0,67	-0,62	-0,58	-0,54	-0,50	-0,47	-0,44
	III	-4,35	-3,62	-3,10	-2,72	-2,41	-2,17	-1,97	-1,81	-1,67	-1,55	-1,45	-1,36	-1,28	-1,20	-1,14	-1,08	-1,02	-0,94	-0,86	-0,79	-0,72	-0,67	-0,62	-0,58	-0,54	-0,50	-0,47	-0,44
120	I	-5,24	-4,36	-3,74	-3,27	-2,90	-2,61	-2,38	-2,18	-2,01	-1,86	-1,74	-1,63	-1,53	-1,45	-1,37	-1,27	-1,15	-1,05	-0,97	-0,89	-0,82	-0,76	-0,70	-0,65	-0,61	-0,57	-0,53	-0,50
	II	-5,24	-4,36	-3,74	-3,27	-2,90	-2,61	-2,38	-2,18	-2,01	-1,86	-1,74	-1,63	-1,53	-1,45	-1,37	-1,27	-1,15	-1,05	-0,97	-0,89	-0,82	-0,76	-0,70	-0,65	-0,61	-0,57	-0,53	-0,50
	III	-5,24	-4,36	-3,74	-3,27	-2,90	-2,61	-2,38	-2,18	-2,01	-1,86	-1,74	-1,63	-1,53	-1,45	-1,37	-1,27	-1,15	-1,05	-0,97	-0,89	-0,82	-0,76	-0,70	-0,65	-0,61	-0,57	-0,53	-0,50
150	I	-6,55	-5,46	-4,68	-4,09	-3,64	-3,27	-2,98	-2,73	-2,52	-2,34	-2,18	-2,04	-1,92	-1,79	-1,60	-1,45	-1,31	-1,19	-1,09	-1,00	-0,93	-0,86	-0,80	-0,74	-0,69	-0,65	-0,61	-0,57
	II	-6,55	-5,46	-4,68	-4,09	-3,64	-3,27	-2,98	-2,73	-2,52	-2,34	-2,18	-2,04	-1,92	-1,79	-1,60	-1,45	-1,31	-1,19	-1,09	-1,00	-0,93	-0,86	-0,80	-0,74	-0,69	-0,65	-0,61	-0,57
	III	-6,55	-5,46	-4,68	-4,09	-3,64	-3,27	-2,98	-2,73	-2,52	-2,34	-2,18	-2,04	-1,92	-1,79	-1,56	-1,35	-1,19	-1,05	-1,09	-1,00	-0,81	-0,74	-0,67	-0,62	-0,57	-0,52	-0,49	-0,45
160	I	-6,99	-5,83	-4,99	-4,37	-3,88	-3,49	-3,18	-2,91	-2,69	-2,49	-2,33	-2,18	-2,05	-1,86	-1,67	-1,51	-1,37	-1,25	-1,14	-1,05	-0,97	-0,90	-0,83	-0,77	-0,72	-0,67	-0,63	-0,59
	II	-6,99	-5,83	-4,99	-4,37	-3,88	-3,49	-3,18	-2,91	-2,69	-2,49	-2,33	-2,18	-2,05	-1,86	-1,67	-1,51	-1,37	-1,25	-1,14	-1,05	-0,97	-0,90	-0,83	-0,77	-0,72	-0,67	-0,63	-0,59
	III	-6,99	-5,83	-4,99	-4,37	-3,88	-3,49	-3,18	-2,91	-2,69	-2,49	-2,33	-2,18	-2,05	-1,80	-1,54	-1,33	-1,16	-1,02	-0,98	-0,88	-0,79	-0,72	-0,65	-0,60	-0,55	-0,51	-0,47	-0,43
180	I	-7,87	-6,56	-5,62	-4,92	-4,37	-3,94	-3,58	-3,28	-3,03	-2,81	-2,62	-2,46	-2,22	-1,98	-1,78	-1,60	-1,45	-1,32	-1,21	-1,11	-1,02	-0,96	-0,89	-0,82	-0,77	-0,72	-0,67	-0,63
	II	-7,87	-6,56	-5,62	-4,92	-4,37	-3,94	-3,58	-3,28	-3,03	-2,81	-2,62	-2,46	-2,22	-1,98	-1,78	-1,60	-1,45	-1,32	-1,21	-1,11	-1,02	-0,96	-0,89	-0,82	-0,77	-0,72	-0,67	-0,63
	III	-7,87	-6,56	-5,62	-4,92	-4,37	-3,94	-3,58	-3,28	-3,03	-2,81	-2,62	-2,46	-2,14	-1,79	-1,52	-1,30	-1,13	-1,32	-0,94	-0,84	-0,75	-0,68	-0,62	-0,56	-0,51	-0,47	-0,43	-0,40
200	I	-8,76	-7,30	-6,25	-5,47	-4,86	-4,38	-3,98	-3,65	-3,37	-3,12	-2,92	-2,65	-2,34	-2,09	-1,88	-1,69	-1,53	-1,40	-1,28	-1,17	-1,08	-0,99	-0,94	-0,87	-0,81	-0,76	-0,71	-0,66
	II	-8,76	-7,30	-6,25	-5,47	-4,86	-4,38	-3,98	-3,65	-3,37	-3,12	-2,92	-2,65	-2,34	-2,09	-1,88	-1,69	-1,53	-1,40	-1,28	-1,17	-1,08	-0,99	-0,94	-0,87	-0,81	-0,76	-0,71	-0,66
	III	-8,76	-7,30	-6,25	-5,47	-4,86	-4,38	-3,98	-3,65	-3,37	-3,12	-2,92	-2,56	-2,09	-1,73	-1,44	-1,22	-1,04	-0,99	-0,87	-0,77	-0,68	-0,61	-0,55	-0,50	-0,45	-0,41	-0,38	-0,35

Colour groups: ***I*** *- very light colours,* ***II*** *- light colours,* ***III*** *- dark colours*
Linear support has been assumed. Panels mounted by loop through connectors with aluminium or steel washers. Support width: min. 40mm.

Table 18. 1 span arrangement - maximum characteristic loads for BALEXTHERM-MW-LT-W-ST sandwich panels with mineral wool core, in claddings of 0,50/0,50 mm thickness, profile types: M/L, 40mm outer support width. Direction of force - TO THE SUPPORT

BALEXTHERM MW-LT-W-ST																														
Core thickness	Colour group	Maximum loads [kN/m²] for the span L[m]																												
		1,25	1,50	1,75	2,00	2,25	2,50	2,75	3,00	3,25	3,50	3,75	4,00	4,25	4,50	4,75	5,00	5,25	5,50	5,75	6,00	6,25	6,50	6,75	7,00	7,25	7,50	7,75	8,00
80	I	1,98	1,65	1,41	1,23	1,10	0,99	0,90	0,83	0,76	0,71	0,66	0,62	0,58	0,55	0,52	0,50	0,47	0,45	0,43	0,41	0,40	0,38	0,37	0,35	0,34	0,32	0,30	0,28
	II	1,98	1,65	1,41	1,23	1,10	0,99	0,90	0,83	0,76	0,71	0,66	0,62	0,58	0,55	0,52	0,50	0,47	0,45	0,43	0,41	0,40	0,38	0,37	0,35	0,34	0,32	0,30	0,28
	III	1,98	1,65	1,41	1,23	1,10	0,99	0,90	0,83	0,76	0,71	0,66	0,62	0,58	0,55	0,52	0,50	0,47	0,45	0,43	0,41	0,40	0,38	0,37	0,35	0,34	0,32	0,30	0,28
100	I	1,98	1,65	1,41	1,23	1,10	0,99	0,90	0,83	0,76	0,71	0,66	0,62	0,58	0,55	0,52	0,50	0,47	0,45	0,43	0,41	0,40	0,38	0,37	0,35	0,34	0,33	0,32	0,31
	II	1,98	1,65	1,41	1,23	1,10	0,99	0,90	0,83	0,76	0,71	0,66	0,62	0,58	0,55	0,52	0,50	0,47	0,45	0,43	0,41	0,40	0,38	0,37	0,35	0,34	0,33	0,32	0,31
	III	1,98	1,65	1,41	1,23	1,10	0,99	0,90	0,83	0,76	0,71	0,66	0,62	0,58	0,55	0,52	0,50	0,47	0,45	0,43	0,41	0,40	0,38	0,37	0,35	0,34	0,33	0,32	0,31
120	I	1,98	1,65	1,41	1,23	1,10	0,99	0,90	0,83	0,76	0,71	0,66	0,62	0,58	0,55	0,52	0,50	0,47	0,45	0,43	0,41	0,40	0,38	0,37	0,35	0,34	0,33	0,32	0,31
	II	1,98	1,65	1,41	1,23	1,10	0,99	0,90	0,83	0,76	0,71	0,66	0,62	0,58	0,55	0,52	0,50	0,47	0,45	0,43	0,41	0,40	0,38	0,37	0,35	0,34	0,33	0,32	0,31
	III	1,98	1,65	1,41	1,23	1,10	0,99	0,90	0,83	0,76	0,71	0,66	0,62	0,58	0,55	0,52	0,50	0,47	0,45	0,43	0,41	0,40	0,38	0,37	0,35	0,34	0,33	0,32	0,31
150	I	1,98	1,65	1,41	1,23	1,10	0,99	0,90	0,83	0,76	0,71	0,66	0,62	0,58	0,55	0,52	0,50	0,47	0,45	0,43	0,41	0,40	0,38	0,37	0,35	0,34	0,33	0,32	0,31
	II	1,98	1,65	1,41	1,23	1,10	0,99	0,90	0,83	0,76	0,71	0,66	0,62	0,58	0,55	0,52	0,50	0,47	0,45	0,43	0,41	0,40	0,38	0,37	0,35	0,34	0,33	0,32	0,31
	III	1,98	1,65	1,41	1,23	1,10	0,99	0,90	0,83	0,76	0,71	0,66	0,62	0,58	0,55	0,52	0,50	0,47	0,45	0,43	0,41	0,40	0,38	0,37	0,35	0,34	0,33	0,32	0,31
160	I	1,82	1,52	1,30	1,14	1,01	0,92	0,83	0,76	0,71	0,65	0,61	0,57	0,54	0,51	0,48	0,46	0,44	0,42	0,40	0,38	0,36	0,35	0,34	0,32	0,31	0,30	0,29	0,28
	II	1,82	1,52	1,30	1,14	1,01	0,92	0,83	0,76	0,71	0,65	0,61	0,57	0,54	0,51	0,48	0,46	0,44	0,42	0,40	0,38	0,36	0,35	0,34	0,32	0,31	0,30	0,29	0,28
	III	1,82	1,52	1,30	1,14	1,01	0,92	0,83	0,76	0,71	0,65	0,61	0,57	0,54	0,51	0,48	0,46	0,44	0,42	0,40	0,38	0,36	0,35	0,34	0,32	0,31	0,30	0,29	0,28
180	I	1,82	1,52	1,30	1,14	1,01	0,92	0,83	0,76	0,71	0,65	0,61	0,57	0,54	0,51	0,48	0,46	0,44	0,42	0,40	0,38	0,36	0,35	0,34	0,32	0,31	0,30	0,29	0,28
	II	1,82	1,52	1,30	1,14	1,01	0,92	0,83	0,76	0,71	0,65	0,61	0,57	0,54	0,51	0,48	0,46	0,44	0,42	0,40	0,38	0,36	0,35	0,34	0,32	0,31	0,30	0,29	0,28
	III	1,82	1,52	1,30	1,14	1,01	0,92	0,83	0,76	0,71	0,65	0,61	0,57	0,54	0,51	0,48	0,46	0,44	0,42	0,40	0,38	0,36	0,35	0,34	0,32	0,31	0,30	0,29	0,28
200	I	1,82	1,52	1,30	1,14	1,01	0,92	0,83	0,76	0,71	0,65	0,61	0,57	0,54	0,51	0,48	0,46	0,44	0,42	0,40	0,38	0,36	0,35	0,34	0,32	0,31	0,30	0,29	0,28
	II	1,82	1,52	1,30	1,14	1,01	0,92	0,83	0,76	0,71	0,65	0,61	0,57	0,54	0,51	0,48	0,46	0,44	0,42	0,40	0,38	0,36	0,35	0,34	0,32	0,31	0,30	0,29	0,28
	III	1,82	1,52	1,30	1,14	1,01	0,92	0,83	0,76	0,71	0,65	0,61	0,57	0,54	0,51	0,48	0,46	0,44	0,42	0,40	0,38	0,36	0,35	0,34	0,32	0,31	0,30	0,29	0,28
240	I	1,82	1,52	1,30	1,14	1,01	0,92	0,83	0,76	0,71	0,65	0,61	0,57	0,54	0,51	0,48	0,46	0,44	0,42	0,40	0,38	0,36	0,35	0,34	0,32	0,31	0,30	0,29	0,28
	II	1,82	1,52	1,30	1,14	1,01	0,92	0,83	0,76	0,71	0,65	0,61	0,57	0,54	0,51	0,48	0,46	0,44	0,42	0,40	0,38	0,36	0,35	0,34	0,32	0,31	0,30	0,29	0,28
	III	1,82	1,52	1,30	1,14	1,01	0,92	0,83	0,76	0,71	0,65	0,61	0,57	0,54	0,51	0,48	0,46	0,44	0,42	0,40	0,38	0,36	0,35	0,34	0,32	0,31	0,30	0,29	0,28

Colour groups: ***I*** *- very light colours,* ***II*** *- light colours,* ***III*** *- dark colours*
Linear support has been assumed. Panels mounted by loop through connectors with aluminium or steel washers. Support width: min. 40mm.

Table 19. 2 span arrangement - maximum characteristic loads for BALEXTHERM-MW-LT-W-ST sandwich panels with mineral wool core, in claddings of 0,50/0,50 mm thickness, profile types: M/L, 40mm outer support width, 60mm inner support width.
Direction of force - TO THE SUPPORT

BALEXTHERM MW-LT-W-ST																														
Core thickness	Colour group	Maximum loads [kN/m²] for the span L[m]																												
		1,25	1,50	1,75	2,00	2,25	2,50	2,75	3,00	3,25	3,50	3,75	4,00	4,25	4,50	4,75	5,00	5,25	5,50	5,75	6,00	6,25	6,50	6,75	7,00	7,25	7,50	7,75	8,00
80	I	1,48	1,23	1,06	0,93	0,83	0,75	0,68	0,62	0,57	0,53	0,50	0,46	0,44	0,41	0,39	0,37	0,35	0,34	0,32	0,31	0,30	0,29	0,28	0,27	0,26	0,25	0,24	0,23
	II	1,48	1,23	1,06	0,93	0,83	0,75	0,68	0,62	0,57	0,53	0,50	0,46	0,44	0,41	0,39	0,37	0,35	0,34	0,32	0,31	0,30	0,29	0,28	0,27	0,26	0,25	0,24	0,23
	III	1,48	1,23	1,06	0,93	0,83	0,75	0,68	0,62	0,57	0,53	0,50	0,46	0,44	0,41	0,39	0,37	0,35	0,34	0,32	0,31	0,30	0,29	0,28	0,27	0,26	0,25	0,24	0,23
100	I	1,48	1,23	1,06	0,93	0,83	0,75	0,68	0,62	0,57	0,53	0,50	0,46	0,44	0,41	0,39	0,37	0,35	0,34	0,32	0,31	0,30	0,29	0,28	0,27	0,26	0,25	0,24	0,23
	II	1,48	1,23	1,06	0,93	0,83	0,75	0,68	0,62	0,57	0,53	0,50	0,46	0,44	0,41	0,39	0,37	0,35	0,34	0,32	0,31	0,30	0,29	0,28	0,27	0,26	0,25	0,24	0,23
	III	1,48	1,23	1,06	0,93	0,83	0,75	0,68	0,62	0,57	0,53	0,50	0,46	0,44	0,41	0,39	0,37	0,35	0,34	0,32	0,31	0,30	0,29	0,28	0,27	0,26	0,25	0,24	0,23
120	I	1,48	1,23	1,06	0,93	0,83	0,75	0,68	0,62	0,57	0,53	0,50	0,46	0,44	0,41	0,39	0,37	0,35	0,34	0,32	0,31	0,30	0,29	0,28	0,27	0,26	0,25	0,24	0,23
	II	1,48	1,23	1,06	0,93	0,83	0,75	0,68	0,62	0,57	0,53	0,50	0,46	0,44	0,41	0,39	0,37	0,35	0,34	0,32	0,31	0,30	0,29	0,28	0,27	0,26	0,25	0,24	0,23
	III	1,48	1,23	1,06	0,93	0,83	0,75	0,68	0,62	0,57	0,53	0,50	0,46	0,44	0,41	0,39	0,37	0,35	0,34	0,32	0,31	0,30	0,29	0,28	0,27	0,26	0,25	0,24	0,23
150	I	1,48	1,23	1,06	0,93	0,83	0,75	0,68	0,62	0,57	0,53	0,50	0,46	0,44	0,41	0,39	0,37	0,35	0,34	0,32	0,31	0,30	0,29	0,28	0,27	0,26	0,25	0,24	0,23
	II	1,48	1,23	1,06	0,93	0,83	0,75	0,68	0,62	0,57	0,53	0,50	0,46	0,44	0,41	0,39	0,37	0,35	0,34	0,32	0,31	0,30	0,29	0,28	0,27	0,26	0,25	0,24	0,23
	III	1,48	1,23	1,06	0,93	0,83	0,75	0,68	0,62	0,57	0,53	0,50	0,46	0,44	0,41	0,39	0,37	0,35	0,34	0,32	0,31	0,30	0,29	0,28	0,27	0,26	0,25	0,24	0,23
160	I	1,37	1,14	0,98	0,86	0,76	0,69	0,62	0,57	0,53	0,49	0,46	0,43	0,40	0,38	0,36	0,34	0,32	0,31	0,30	0,29	0,28	0,27	0,26	0,25	0,24	0,23	0,22	0,21
	II	1,37	1,14	0,98	0,86	0,76	0,69	0,62	0,57	0,53	0,49	0,46	0,43	0,40	0,38	0,36	0,34	0,32	0,31	0,30	0,29	0,28	0,27	0,26	0,25	0,24	0,23	0,22	0,21
	III	1,37	1,14	0,98	0,86	0,76	0,69	0,62	0,57	0,53	0,49	0,46	0,43	0,40	0,38	0,36	0,34	0,32	0,31	0,30	0,29	0,28	0,27	0,26	0,25	0,24	0,23	0,22	0,21
180	I	1,37	1,14	0,98	0,86	0,76	0,69	0,62	0,57	0,51	0,46	0,43	0,40	0,38	0,36	0,35	0,34	0,32	0,31	0,30	0,29	0,28	0,27	0,26	0,25	0,24	0,23	0,22	0,21
	II	1,37	1,14	0,98	0,86	0,76	0,69	0,62	0,57	0,51	0,46	0,43	0,40	0,38	0,36	0,35	0,34	0,32	0,31	0,30	0,29	0,28	0,27	0,26	0,25	0,24	0,23	0,22	0,21
	III	1,37	1,14	0,98	0,86	0,76	0,69	0,62	0,57	0,51	0,46	0,43	0,40	0,38	0,36	0,35	0,34	0,32	0,31	0,30	0,29	0,28	0,27	0,26	0,25	0,24	0,23	0,22	0,21
200	I	1,37	1,14	0,98	0,86	0,76	0,69	0,62	0,57	0,51	0,46	0,43	0,40	0,38	0,36	0,35	0,34	0,32	0,31	0,30	0,29	0,28	0,27	0,26	0,25	0,24	0,23	0,22	0,21
	II	1,37	1,14	0,98	0,86	0,76	0,69	0,62	0,57	0,51	0,46	0,43	0,40	0,38	0,36	0,35	0,34	0,32	0,31	0,30	0,29	0,28	0,27	0,26	0,25	0,24	0,23	0,22	0,21
	III	1,37	1,14	0,98	0,86	0,76	0,69	0,62	0,57	0,51	0,46	0,43	0,40	0,38	0,36	0,35	0,34	0,32	0,31	0,30	0,29	0,28	0,27	0,26	0,25	0,24	0,23	0,22	0,21
240	I	1,37	1,14	0,98	0,86	0,76	0,69	0,62	0,57	0,51	0,46	0,43	0,40	0,38	0,36	0,35	0,34	0,32	0,31	0,30	0,29	0,28	0,27	0,26	0,25	0,24	0,23	0,22	0,21
	II	1,37	1,14	0,98	0,86	0,76	0,69	0,62	0,57	0,51	0,46	0,43	0,40	0,38	0,36	0,35	0,34	0,32	0,31	0,30	0,29	0,28	0,27	0,26	0,25	0,24	0,23	0,22	0,21
	III	1,37	1,14	0,98	0,86	0,76	0,69	0,62	0,57	0,51	0,46	0,43	0,40	0,38	0,36	0,35	0,34	0,32	0,31	0,30	0,29	0,28	0,27	0,26	0,25	0,24	0,23	0,22	0,21

Colour groups: ***I*** *- very light colours,* ***II*** *- light colours,* ***III*** *- dark colours*
Linear support has been assumed. Panels mounted by loop through connectors with aluminium or steel washers. Support width: min. 40mm.

Table 20. 3 span arrangement - maximum characteristic loads for BALEXTHERM-MW-LT-W-ST sandwich panels with mineral wool core, in claddings of 0,50/0,50 mm thickness, profile types: M/L, 40mm outer support width, 60mm inner support width.
Direction of force - TO THE SUPPORT

BALEXTHERM MW-LT-W-ST																														
Core thickness	Colour group	Maximum loads [kN/m²] for the span L[m]																												
		1,25	1,50	1,75	2,00	2,25	2,50	2,75	3,00	3,25	3,50	3,75	4,00	4,25	4,50	4,75	5,00	5,25	5,50	5,75	6,00	6,25	6,50	6,75	7,00	7,25	7,50	7,75	8,00
80	I	1,48	1,23	1,06	0,93	0,83	0,75	0,68	0,62	0,57	0,53	0,50	0,46	0,44	0,41	0,39	0,37	0,35	0,34	0,32	0,31	0,30	0,29	0,28	0,27	0,26	0,25	0,24	0,23
	II	1,48	1,23	1,06	0,93	0,83	0,75	0,68	0,62	0,57	0,53	0,50	0,46	0,44	0,41	0,39	0,37	0,35	0,34	0,32	0,31	0,30	0,29	0,28	0,27	0,26	0,25	0,24	0,23
	III	1,48	1,23	1,06	0,93	0,83	0,75	0,68	0,62	0,57	0,53	0,50	0,46	0,44	0,41	0,39	0,37	0,35	0,34	0,32	0,31	0,30	0,29	0,28	0,27	0,26	0,25	0,24	0,23
100	I	1,48	1,23	1,06	0,93	0,83	0,75	0,68	0,62	0,57	0,53	0,50	0,46	0,44	0,41	0,39	0,37	0,35	0,34	0,32	0,31	0,30	0,29	0,28	0,27	0,26	0,25	0,24	0,23
	II	1,48	1,23	1,06	0,93	0,83	0,75	0,68	0,62	0,57	0,53	0,50	0,46	0,44	0,41	0,39	0,37	0,35	0,34	0,32	0,31	0,30	0,29	0,28	0,27	0,26	0,25	0,24	0,23
	III	1,48	1,23	1,06	0,93	0,83	0,75	0,68	0,62	0,57	0,53	0,50	0,46	0,44	0,41	0,39	0,37	0,35	0,34	0,32	0,31	0,30	0,29	0,28	0,27	0,26	0,25	0,24	0,23
120	I	1,48	1,23	1,06	0,93	0,83	0,75	0,68	0,62	0,57	0,53	0,50	0,46	0,44	0,41	0,39	0,37	0,35	0,34	0,32	0,31	0,30	0,29	0,28	0,27	0,26	0,25	0,24	0,23
	II	1,48	1,23	1,06	0,93	0,83	0,75	0,68	0,62	0,57	0,53	0,50	0,46	0,44	0,41	0,39	0,37	0,35	0,34	0,32	0,31	0,30	0,29	0,28	0,27	0,26	0,25	0,24	0,23
	III	1,48	1,23	1,06	0,93	0,83	0,75	0,68	0,62	0,57	0,53	0,50	0,46	0,44	0,41	0,39	0,37	0,35	0,34	0,32	0,31	0,30	0,29	0,28	0,27	0,26	0,25	0,24	0,23
150	I	1,48	1,23	1,06	0,93	0,83	0,75	0,68	0,62	0,57	0,53	0,50	0,46	0,44	0,41	0,39	0,37	0,35	0,34	0,32	0,31	0,30	0,29	0,28	0,27	0,26	0,25	0,24	0,23
	II	1,48	1,23	1,06	0,93	0,83	0,75	0,68	0,62	0,57	0,53	0,50	0,46	0,44	0,41	0,39	0,37	0,35	0,34	0,32	0,31	0,30	0,29	0,28	0,27	0,26	0,25	0,24	0,23
	III	1,48	1,23	1,06	0,93	0,83	0,75	0,68	0,62	0,57	0,53	0,50	0,46	0,44	0,41	0,39	0,37	0,35	0,34	0,32	0,31	0,30	0,29	0,28	0,27	0,26	0,25	0,24	0,23
160	I	1,37	1,14	0,98	0,86	0,76	0,69	0,62	0,57	0,53	0,49	0,46	0,43	0,40	0,38	0,36	0,34	0,32	0,31	0,30	0,29	0,28	0,27	0,26	0,25	0,24	0,23	0,22	0,21
	II	1,37	1,14	0,98	0,86	0,76	0,69	0,62	0,57	0,53	0,49	0,46	0,43	0,40	0,38	0,36	0,34	0,32	0,31	0,30	0,29	0,28	0,27	0,26	0,25	0,24	0,23	0,22	0,21
	III	1,37	1,14	0,98	0,86	0,76	0,69	0,62	0,57	0,53	0,49	0,46	0,43	0,40	0,38	0,36	0,34	0,32	0,31	0,30	0,29	0,28	0,27	0,26	0,25	0,24	0,23	0,22	0,21
180	I	1,37	1,14	0,98	0,86	0,76	0,69	0,62	0,57	0,53	0,49	0,46	0,43	0,40	0,38	0,36	0,34	0,32	0,31	0,30	0,29	0,28	0,27	0,26	0,25	0,24	0,23	0,22	0,21
	II	1,37	1,14	0,98	0,86	0,76	0,69	0,62	0,57	0,53	0,49	0,46	0,43	0,40	0,38	0,36	0,34	0,32	0,31	0,30	0,29	0,28	0,27	0,26	0,25	0,24	0,23	0,22	0,21
	III	1,37	1,14	0,72	0,54	0,45	0,42	0,41	0,42	0,44	0,47	0,46	0,43	0,40	0,38	0,36	0,34	0,32	0,25	0,11	0,00	0,00	0,00	0,00	0,00	0,00	0,00	0,00	0,00
200	I	1,37	1,14	0,98	0,86	0,76	0,69	0,62	0,57	0,53	0,49	0,46	0,43	0,40	0,38	0,36	0,34	0,32	0,31	0,30	0,29	0,28	0,27	0,26	0,25	0,24	0,23	0,22	0,21
	II	1,37	1,14	0,98	0,86	0,76	0,69	0,62	0,57	0,53	0,49	0,46	0,43	0,40	0,38	0,36	0,34	0,32	0,31	0,30	0,29	0,28	0,27	0,26	0,25	0,24	0,23	0,22	0,21
	III	1,37	1,14	0,72	0,54	0,45	0,42	0,41	0,42	0,44	0,47	0,46	0,43	0,40	0,38	0,36	0,34	0,32	0,25	0,11	0,00	0,00	0,00	0,00	0,00	0,00	0,00	0,00	0,00
240	I	1,37	1,14	0,98	0,86	0,76	0,69	0,62	0,57	0,53	0,49	0,46	0,43	0,40	0,38	0,36	0,34	0,32	0,31	0,30	0,29	0,28	0,27	0,26	0,25	0,24	0,23	0,22	0,21
	II	1,37	1,14	0,98	0,86	0,76	0,69	0,62	0,57	0,53	0,49	0,46	0,43	0,40	0,38	0,36	0,34	0,32	0,31	0,30	0,29	0,28	0,27	0,26	0,25	0,24	0,23	0,22	0,21
	III	1,37	1,14	0,72	0,54	0,45	0,42	0,41	0,42	0,44	0,47	0,46	0,43	0,40	0,38	0,36	0,34	0,32	0,25	0,11	0,00	0,00	0,00	0,00	0,00	0,00	0,00	0,00	0,00

*Colour groups: **I** - very light colours, **II** - light colours, **III** - dark colours*
Linear support has been assumed. Panels mounted by loop through connectors with aluminium or steel washers. Support width: min. 40mm.

Table 21. 1 span arrangement - maximum characteristic loads for BALEXTHERM-MW-LT-W-ST sandwich panels with mineral wool core, in claddings of 0,50/0,50 mm thickness, profile types: M/L, 40mm outer support width.
Direction of force - FROM THE SUPPORT

BALEXTHERM MW-LT-W-ST																														
Core thickness	Colour group	Maximum loads [kN/m²] for the span L[m]																												
		1,25	1,50	1,75	2,00	2,25	2,50	2,75	3,00	3,25	3,50	3,75	4,00	4,25	4,50	4,75	5,00	5,25	5,50	5,75	6,00	6,25	6,50	6,75	7,00	7,25	7,50	7,75	8,00
80	I	-2,52	-2,10	-1,80	-1,57	-1,40	-1,26	-1,14	-1,05	-0,97	-0,90	-0,84	-0,79	-0,74	-0,70	-0,66	-0,63	-0,60	-0,57	-0,55	-0,50	-0,46	-0,43	-0,40	-0,37	-0,34	-0,32	-0,30	-0,28
	II	-2,52	-2,10	-1,80	-1,57	-1,40	-1,26	-1,14	-1,05	-0,97	-0,90	-0,84	-0,79	-0,74	-0,70	-0,66	-0,63	-0,60	-0,57	-0,55	-0,50	-0,46	-0,43	-0,40	-0,37	-0,34	-0,32	-0,30	-0,28
	III	-2,52	-2,10	-1,80	-1,57	-1,40	-1,26	-1,14	-1,05	-0,97	-0,90	-0,84	-0,79	-0,74	-0,70	-0,66	-0,63	-0,60	-0,57	-0,55	-0,50	-0,46	-0,43	-0,37	-0,30	-0,25	-0,20	-0,16	-0,13
100	I	-3,16	-2,63	-2,25	-1,97	-1,75	-1,58	-1,43	-1,31	-1,21	-1,12	-1,05	-0,99	-0,93	-0,88	-0,83	-0,79	-0,75	-0,72	-0,67	-0,61	-0,56	-0,52	-0,48	-0,45	-0,42	-0,39	-0,37	-0,34
	II	-3,16	-2,63	-2,25	-1,97	-1,75	-1,58	-1,43	-1,31	-1,21	-1,12	-1,05	-0,99	-0,93	-0,88	-0,83	-0,79	-0,75	-0,72	-0,67	-0,61	-0,56	-0,52	-0,48	-0,45	-0,42	-0,39	-0,37	-0,34
	III	-3,16	-2,63	-2,25	-1,97	-1,75	-1,58	-1,43	-1,31	-1,21	-1,12	-1,05	-0,99	-0,93	-0,88	-0,83	-0,79	-0,75	-0,72	-0,67	-0,61	-0,56	-0,52	-0,48	-0,45	-0,42	-0,39	-0,37	-0,34
120	I	-3,80	-3,16	-2,71	-2,37	-2,11	-1,90	-1,72	-1,58	-1,46	-1,35	-1,26	-1,18	-1,11	-1,05	-0,99	-0,95	-0,91	-0,86	-0,78	-0,72	-0,66	-0,61	-0,57	-0,53	-0,49	-0,46	-0,43	-0,40
	II	-3,80	-3,16	-2,71	-2,37	-2,11	-1,90	-1,72	-1,58	-1,46	-1,35	-1,26	-1,18	-1,11	-1,05	-0,99	-0,95	-0,91	-0,86	-0,78	-0,72	-0,66	-0,61	-0,57	-0,53	-0,49	-0,46	-0,43	-0,40
	III	-3,80	-3,16	-2,71	-2,37	-2,11	-1,90	-1,72	-1,58	-1,46	-1,35	-1,26	-1,18	-1,11	-1,05	-0,99	-0,95	-0,91	-0,86	-0,78	-0,72	-0,66	-0,61	-0,57	-0,53	-0,49	-0,46	-0,43	-0,40
150	I	-4,76	-3,97	-3,40	-2,97	-2,64	-2,38	-2,16	-1,98	-1,83	-1,70	-1,58	-1,48	-1,40	-1,32	-1,25	-1,18	-1,13	-1,03	-0,95	-0,87	-0,80	-0,74	-0,69	-0,64	-0,59	-0,55	-0,52	-0,49
	II	-4,76	-3,97	-3,40	-2,97	-2,64	-2,38	-2,16	-1,98	-1,83	-1,70	-1,58	-1,48	-1,40	-1,32	-1,25	-1,18	-1,13	-1,03	-0,95	-0,87	-0,80	-0,74	-0,69	-0,64	-0,59	-0,55	-0,52	-0,49
	III	-4,76	-3,97	-3,40	-2,97	-2,64	-2,38	-2,16	-1,98	-1,83	-1,70	-1,58	-1,48	-1,40	-1,32	-1,25	-1,18	-1,13	-1,03	-0,95	-0,87	-0,80	-0,74	-0,69	-0,64	-0,59	-0,55	-0,52	-0,49
160	I	-5,08	-4,23	-3,63	-3,17	-2,82	-2,54	-2,30	-2,11	-1,95	-1,81	-1,69	-1,58	-1,49	-1,41	-1,33	-1,26	-1,16	-1,06	-0,97	-0,89	-0,82	-0,76	-0,71	-0,66	-0,61	-0,57	-0,53	-0,50
	II	-5,08	-4,23	-3,63	-3,17	-2,82	-2,54	-2,30	-2,11	-1,95	-1,81	-1,69	-1,58	-1,49	-1,41	-1,33	-1,26	-1,16	-1,06	-0,97	-0,89	-0,82	-0,76	-0,71	-0,66	-0,61	-0,57	-0,53	-0,50
	III	-5,08	-4,23	-3,63	-3,17	-2,82	-2,54	-2,30	-2,11	-1,95	-1,81	-1,69	-1,58	-1,49	-1,41	-1,33	-1,26	-1,16	-1,06	-0,97	-0,89	-0,82	-0,76	-0,71	-0,66	-0,61	-0,57	-0,53	-0,50
180	I	-5,72	-4,77	-4,08	-3,57	-3,17	-2,86	-2,60	-2,38	-2,20	-2,04	-1,90	-1,78	-1,68	-1,58	-1,49	-1,34	-1,22	-1,11	-1,02	-0,94	-0,87	-0,80	-0,74	-0,69	-0,64	-0,60	-0,56	-0,53
	II	-5,72	-4,77	-4,08	-3,57	-3,17	-2,86	-2,60	-2,38	-2,20	-2,04	-1,90	-1,78	-1,68	-1,58	-1,49	-1,34	-1,22	-1,11	-1,02	-0,94	-0,87	-0,80	-0,74	-0,69	-0,64	-0,60	-0,56	-0,53
	III	-5,72	-4,77	-4,08	-3,57	-3,17	-2,86	-2,60	-2,38	-2,20	-2,04	-1,90	-1,78	-1,68	-1,58	-1,49	-1,34	-1,22	-1,11	-1,02	-0,94	-0,87	-0,80	-0,74	-0,69	-0,64	-0,60	-0,56	-0,53
200	I	-6,36	-5,30	-4,54	-3,97	-3,53	-3,18	-2,89	-2,65	-2,44	-2,27	-2,12	-1,98	-1,87	-1,72	-1,54	-1,39	-1,26	-1,15	-1,05	-0,97	-0,90	-0,83	-0,77	-0,71	-0,66	-0,62	-0,58	-0,54
	II	-6,36	-5,30	-4,54	-3,97	-3,53	-3,18	-2,89	-2,65	-2,44	-2,27	-2,12	-1,98	-1,87	-1,72	-1,54	-1,39	-1,26	-1,15	-1,05	-0,97	-0,90	-0,83	-0,77	-0,71	-0,66	-0,62	-0,58	-0,54
	III	-6,36	-5,30	-4,54	-3,97	-3,53	-3,18	-2,89	-2,65	-2,44	-2,27	-2,12	-1,98	-1,87	-1,72	-1,54	-1,39	-1,26	-1,15	-1,05	-0,97	-0,90	-0,83	-0,77	-0,71	-0,66	-0,62	-0,58	-0,54
240	I	-7,64	-6,36	-5,45	-4,77	-4,24	-3,82	-3,47	-3,18	-2,93	-2,72	-2,49	-2,18	-1,93	-1,73	-1,55	-1,40	-1,27	-1,15	-1,05	-0,98	-0,90	-0,83	-0,77	-0,72	-0,67	-0,62	-0,58	-0,55
	II	-7,64	-6,36	-5,45	-4,77	-4,24	-3,82	-3,47	-3,18	-2,93	-2,72	-2,49	-2,18	-1,93	-1,73	-1,55	-1,40	-1,27	-1,15	-1,05	-0,98	-0,90	-0,83	-0,77	-0,72	-0,67	-0,62	-0,58	-0,55
	III	-7,64	-6,36	-5,45	-4,77	-4,24	-3,82	-3,47	-3,18	-2,93	-2,72	-2,49	-2,18	-1,93	-1,73	-1,55	-1,40	-1,27	-1,15	-1,05	-0,98	-0,90	-0,83	-0,77	-0,72	-0,67	-0,62	-0,58	-0,55

*Colour groups: **I** - very light colours, **II** - light colours, **III** - dark colours*
Linear support has been assumed. Panels mounted by loop through connectors with aluminium or steel washers. Support width: min. 40mm.

Table 22. 2 span arrangement - maximum characteristic loads for BALEXTHERM-MW-LT-W-ST sandwich panels with mineral wool core, in claddings of 0,50/0,50 mm thickness, profile types: M/L, 40mm outer support width, 60mm inner support width.
Direction of force - FROM THE SUPPORT

BALEXTHERM MW-LT-W-ST																															
Core thickness	Colour group	Maximum loads [kN/m²] for the span L[m]																													
		1,25	1,50	1,75	2,00	2,25	2,50	2,75	3,00	3,25	3,50	3,75	4,00	4,25	4,50	4,75	5,00	5,25	5,50	5,75	6,00	6,25	6,50	6,75	7,00	7,25	7,50	7,75	8,00
80	I	-2,52	-2,10	-1,79	-1,57	-1,39	-1,25	-1,14	-1,04	-0,97	-0,90	-0,84	-0,79	-0,74	-0,70	-0,66	-0,63	-0,60	-0,57	-0,55	-0,50	-0,46	-0,43	-0,40	-0,37	-0,34	-0,32	-0,30	-0,28
	II	-2,52	-2,10	-1,79	-1,57	-1,39	-1,25	-1,14	-1,04	-0,97	-0,90	-0,84	-0,79	-0,74	-0,70	-0,66	-0,63	-0,60	-0,57	-0,55	-0,50	-0,46	-0,43	-0,40	-0,37	-0,34	-0,32	-0,30	-0,28
	III	-2,52	-2,10	-1,79	-1,57	-1,39	-1,25	-1,14	-1,04	-0,97	-0,90	-0,84	-0,79	-0,74	-0,67	-0,55	-0,46	-0,38	-0,32	-0,28	-0,24	-0,21	-0,18	-0,16	-0,14	-0,12	-0,11	-0,10	-0,09
100	I	-3,16	-2,63	-2,25	-1,97	-1,75	-1,57	-1,43	-1,31	-1,21	-1,12	-1,05	-0,99	-0,93	-0,88	-0,83	-0,79	-0,75	-0,72	-0,67	-0,61	-0,56	-0,52	-0,48	-0,45	-0,42	-0,39	-0,37	-0,34
	II	-3,16	-2,63	-2,25	-1,97	-1,75	-1,57	-1,43	-1,31	-1,21	-1,12	-1,05	-0,99	-0,93	-0,88	-0,83	-0,79	-0,75	-0,72	-0,67	-0,61	-0,56	-0,52	-0,48	-0,45	-0,42	-0,39	-0,37	-0,34
	III	-3,16	-2,63	-2,25	-1,97	-1,75	-1,57	-1,43	-1,31	-1,21	-1,12	-1,05	-0,99	-0,93	-0,88	-0,71	-0,58	-0,48	-0,40	-0,34	-0,29	-0,25	-0,21	-0,18	-0,16	-0,14	-0,12	-0,11	-0,09
120	I	-3,80	-3,16	-2,71	-2,37	-2,11	-1,89	-1,72	-1,58	-1,46	-1,35	-1,26	-1,18	-1,11	-1,05	-0,99	-0,95	-0,91	-0,86	-0,78	-0,72	-0,66	-0,61	-0,57	-0,53	-0,49	-0,46	-0,43	-0,40
	II	-3,80	-3,16	-2,71	-2,37	-2,11	-1,89	-1,72	-1,58	-1,46	-1,35	-1,26	-1,18	-1,11	-1,05	-0,99	-0,95	-0,91	-0,86	-0,78	-0,72	-0,66	-0,61	-0,57	-0,53	-0,49	-0,46	-0,43	-0,40
	III	-3,80	-3,16	-2,71	-2,37	-2,11	-1,89	-1,72	-1,58	-1,46	-1,35	-1,26	-1,18	-1,11	-1,05	-0,91	-0,74	-0,60	-0,50	-0,42	-0,35	-0,29	-0,25	-0,21	-0,18	-0,16	-0,14	-0,12	-0,10
150	I	-4,76	-3,96	-3,39	-2,97	-2,64	-2,37	-2,16	-1,98	-1,83	-1,69	-1,58	-1,48	-1,39	-1,32	-1,25	-1,18	-1,13	-1,03	-0,95	-0,87	-0,80	-0,74	-0,69	-0,64	-0,59	-0,55	-0,52	-0,49
	II	-4,76	-3,96	-3,39	-2,97	-2,64	-2,37	-2,16	-1,98	-1,83	-1,69	-1,58	-1,48	-1,39	-1,32	-1,25	-1,18	-1,13	-1,03	-0,95	-0,87	-0,80	-0,74	-0,69	-0,64	-0,59	-0,55	-0,52	-0,49
	III	-4,76	-3,96	-3,39	-2,97	-2,64	-2,37	-2,16	-1,98	-1,83	-1,69	-1,58	-1,48	-1,39	-1,32	-1,16	-1,18	-0,81	-0,66	-0,54	-0,44	-0,37	-0,31	-0,26	-0,22	-0,18	-0,15	-0,13	-0,11
160	I	-5,08	-4,23	-3,62	-3,17	-2,82	-2,53	-2,30	-2,11	-1,95	-1,81	-1,69	-1,58	-1,49	-1,41	-1,33	-1,26	-1,16	-1,06	-0,97	-0,89	-0,82	-0,76	-0,71	-0,66	-0,61	-0,57	-0,53	-0,50
	II	-5,08	-4,23	-3,62	-3,17	-2,82	-2,53	-2,30	-2,11	-1,95	-1,81	-1,69	-1,58	-1,49	-1,41	-1,33	-1,26	-1,16	-1,06	-0,97	-0,89	-0,82	-0,76	-0,71	-0,66	-0,61	-0,57	-0,53	-0,50
	III	-5,08	-4,23	-3,62	-3,17	-2,82	-2,53	-2,30	-2,11	-1,95	-1,81	-1,69	-1,58	-1,49	-1,41	-1,18	-1,26	-0,81	-0,65	-0,52	-0,42	-0,35	-0,28	-0,23	-0,19	-0,16	-0,13	-0,10	-0,08
180	I	-5,71	-4,76	-4,08	-3,57	-3,17	-2,85	-2,59	-2,38	-2,19	-2,04	-1,90	-1,78	-1,68	-1,58	-1,49	-1,34	-1,22	-1,11	-1,02	-0,94	-0,87	-0,80	-0,74	-0,69	-0,64	-0,60	-0,56	-0,53
	II	-5,71	-4,76	-4,08	-3,57	-3,17	-2,85	-2,59	-2,38	-2,19	-2,04	-1,90	-1,78	-1,68	-1,58	-1,49	-1,34	-1,22	-1,11	-1,02	-0,94	-0,87	-0,80	-0,74	-0,69	-0,64	-0,59	-0,54	-0,49
	III	-5,71	-4,76	-4,08	-3,57	-3,17	-2,85	-2,59	-2,38	-2,19	-2,04	-1,90	-1,78	-1,68	-1,57	-1,18	-0,99	-0,77	-0,60	-0,47	-0,36	-0,28	-0,21	-0,16	-0,12	-0,09	-0,06	-0,04	-0,02
200	I	-6,36	-5,30	-4,54	-3,97	-3,53	-3,18	-2,89	-2,65	-2,44	-2,27	-2,12	-1,98	-1,87	-1,72	-1,54	-1,39	-1,26	-1,15	-1,05	-0,97	-0,90	-0,83	-0,77	-0,71	-0,66	-0,62	-0,58	-0,54
	II	-6,36	-5,30	-4,54	-3,97	-3,53	-3,18	-2,89	-2,65	-2,44	-2,27	-2,12	-1,98	-1,87	-1,72	-1,54	-1,39	-1,26	-1,15	-1,05	-0,97	-0,90	-0,83	-0,77	-0,71	-0,65	-0,58	-0,52	-0,47
	III	-6,36	-5,30	-4,54	-3,97	-3,53	-3,18	-2,89	-2,65	-2,44	-2,27	-2,12	-1,98	-1,87	-1,63	-1,20	-0,99	-0,74	-0,56	-0,41	-0,30	-0,21	-0,14	-0,09	-0,05	-0,01	0,00	0,00	0,00
240	I	-7,63	-6,36	-5,45	-4,77	-4,24	-3,81	-3,47	-3,18	-2,93	-2,72	-2,49	-2,18	-1,93	-1,73	-1,55	-1,40	-1,27	-1,15	-1,05	-0,98	-0,90	-0,83	-0,77	-0,72	-0,67	-0,62	-0,58	-0,55
	II	-7,63	-6,36	-5,45	-4,77	-4,24	-3,81	-3,47	-3,18	-2,93	-2,72	-2,49	-2,18	-1,93	-1,73	-1,55	-1,40	-1,27	-1,15	-1,01	-0,91	-0,76	-0,64	-0,54	-0,46	-0,39	-0,34	-0,29	-0,25
	III	-7,63	-6,36	-5,45	-4,77	-4,24	-3,81	-3,47	-3,18	-2,93	-2,72	-2,49	-2,18	-1,52	-1,73	-0,67	-0,37	-0,15	0,00	0,00	0,00	0,00	0,00	0,00	0,00	0,00	0,00	0,00	0,00

Colour groups: ***I*** *- very light colours,* ***II*** *- light colours,* ***III*** *- dark colours*
Linear support has been assumed. Panels mounted by loop through connectors with aluminium or steel washers. Support width: min. 40mm.

Table 23. 3 span arrangement - maximum characteristic loads for BALEXTHERM-MW-LT-W-ST sandwich panels with mineral wool core, in claddings of 0,50/0,50 mm thickness, profile types: M/L, 40mm outer support width, 60mm inner support width.
Direction of force - FROM THE SUPPORT

BALEXTHERM MW-LT-W-ST																															
Core thickness	Colour group	Maximum loads [kN/m²] for the span L[m]																													
		1,25	1,50	1,75	2,00	2,25	2,50	2,75	3,00	3,25	3,50	3,75	4,00	4,25	4,50	4,75	5,00	5,25	5,50	5,75	6,00	6,25	6,50	6,75	7,00	7,25	7,50	7,75	8,00
80	I	-2,51	-2,09	-1,79	-1,57	-1,39	-1,25	-1,14	-1,04	-0,97	-0,90	-0,84	-0,79	-0,74	-0,70	-0,66	-0,63	-0,60	-0,57	-0,55	-0,50	-0,46	-0,43	-0,40	-0,37	-0,34	-0,32	-0,30	-0,28
	II	-2,51	-2,09	-1,79	-1,57	-1,39	-1,25	-1,14	-1,04	-0,97	-0,90	-0,84	-0,79	-0,74	-0,70	-0,66	-0,63	-0,60	-0,57	-0,55	-0,50	-0,46	-0,43	-0,40	-0,37	-0,34	-0,32	-0,30	-0,28
	III	-2,51	-2,09	-1,79	-1,57	-1,39	-1,25	-1,14	-1,04	-0,97	-0,90	-0,84	-0,79	-0,74	-0,70	-0,66	-0,63	-0,60	-0,57	-0,55	-0,50	-0,46	-0,42	-0,38	-0,35	-0,33	-0,30	-0,28	-0,26
100	I	-3,15	-2,63	-2,25	-1,97	-1,75	-1,57	-1,43	-1,31	-1,21	-1,12	-1,05	-0,99	-0,93	-0,88	-0,83	-0,79	-0,75	-0,72	-0,67	-0,61	-0,56	-0,52	-0,48	-0,45	-0,42	-0,39	-0,37	-0,34
	II	-3,15	-2,63	-2,25	-1,97	-1,75	-1,57	-1,43	-1,31	-1,21	-1,12	-1,05	-0,99	-0,93	-0,88	-0,83	-0,79	-0,75	-0,72	-0,67	-0,61	-0,56	-0,52	-0,48	-0,45	-0,42	-0,39	-0,37	-0,34
	III	-3,15	-2,63	-2,25	-1,97	-1,75	-1,57	-1,43	-1,31	-1,21	-1,12	-1,05	-0,99	-0,93	-0,88	-0,83	-0,79	-0,75	-0,72	-0,65	-0,59	-0,53	-0,48	-0,44	-0,40	-0,37	-0,34	-0,32	-0,29
120	I	-3,79	-3,16	-2,71	-2,37	-2,11	-1,89	-1,72	-1,58	-1,46	-1,35	-1,26	-1,18	-1,11	-1,05	-0,99	-0,95	-0,91	-0,86	-0,78	-0,72	-0,66	-0,61	-0,57	-0,53	-0,49	-0,46	-0,43	-0,40
	II	-3,79	-3,16	-2,71	-2,37	-2,11	-1,89	-1,72	-1,58	-1,46	-1,35	-1,26	-1,18	-1,11	-1,05	-0,99	-0,95	-0,91	-0,86	-0,78	-0,72	-0,66	-0,61	-0,57	-0,53	-0,49	-0,46	-0,43	-0,40
	III	-3,79	-3,16	-2,71	-2,37	-2,11	-1,89	-1,72	-1,58	-1,46	-1,35	-1,26	-1,18	-1,11	-1,05	-0,99	-0,95	-0,91	-0,83	-0,74	-0,67	-0,60	-0,54	-0,49	-0,45	-0,41	-0,38	-0,35	-0,33
150	I	-4,75	-3,96	-3,39	-2,97	-2,64	-2,37	-2,16	-1,98	-1,83	-1,69	-1,58	-1,48	-1,39	-1,32	-1,25	-1,18	-1,13	-1,03	-0,95	-0,87	-0,80	-0,74	-0,69	-0,64	-0,59	-0,55	-0,52	-0,49
	II	-4,75	-3,96	-3,39	-2,97	-2,64	-2,37	-2,16	-1,98	-1,83	-1,69	-1,58	-1,48	-1,39	-1,32	-1,25	-1,18	-1,13	-1,03	-0,95	-0,87	-0,80	-0,74	-0,69	-0,64	-0,59	-0,55	-0,52	-0,49
	III	-4,75	-3,96	-3,39	-2,97	-2,64	-2,37	-2,16	-1,98	-1,83	-1,69	-1,58	-1,48	-1,39	-1,32	-1,25	-1,18	-1,05	-0,98	-0,87	-0,77	-0,69	-0,62	-0,56	-0,51	-0,47	-0,43	-0,39	-0,36
160	I	-5,07	-4,23	-3,62	-3,17	-2,82	-2,53	-2,30	-2,11	-1,95	-1,81	-1,69	-1,58	-1,49	-1,41	-1,33	-1,26	-1,16	-1,06	-0,97	-0,89	-0,82	-0,76	-0,71	-0,66	-0,61	-0,57	-0,53	-0,50
	II	-5,07	-4,23	-3,62	-3,17	-2,82	-2,53	-2,30	-2,11	-1,95	-1,81	-1,69	-1,58	-1,49	-1,41	-1,33	-1,26	-1,16	-1,06	-0,97	-0,89	-0,82	-0,76	-0,71	-0,66	-0,61	-0,57	-0,53	-0,50
	III	-5,07	-4,23	-3,62	-3,17	-2,82	-2,53	-2,30	-2,11	-1,95	-1,81	-1,69	-1,58	-1,49	-1,41	-1,33	-1,19	-1,02	-0,96	-0,84	-0,74	-0,66	-0,59	-0,54	-0,48	-0,44	-0,40	-0,37	-0,34
180	I	-5,71	-4,76	-4,08	-3,57	-3,17	-2,85	-2,59	-2,38	-2,19	-2,04	-1,90	-1,78	-1,68	-1,58	-1,49	-1,34	-1,22	-1,11	-1,02	-0,94	-0,87	-0,80	-0,74	-0,69	-0,64	-0,60	-0,56	-0,53
	II	-5,71	-4,76	-4,08	-3,57	-3,17	-2,85	-2,59	-2,38	-2,19	-2,04	-1,90	-1,78	-1,68	-1,58	-1,49	-1,34	-1,22	-1,11	-1,02	-0,94	-0,87	-0,80	-0,74	-0,69	-0,64	-0,60	-0,56	-0,53
	III	-5,71	-4,76	-4,08	-3,57	-3,17	-2,85	-2,59	-2,38	-2,19	-2,04	-1,90	-1,78	-1,68	-1,58	-1,31	-1,09	-1,22	-0,87	-0,75	-0,66	-0,58	-0,51	-0,46	-0,41	-0,37	-0,33	-0,30	-0,28
200	I	-6,36	-5,30	-4,54	-3,97	-3,53	-3,18	-2,89	-2,65	-2,44	-2,27	-2,12	-1,98	-1,87	-1,72	-1,54	-1,39	-1,26	-1,15	-1,05	-0,97	-0,90	-0,83	-0,77	-0,71	-0,66	-0,62	-0,58	-0,54
	II	-6,36	-5,30	-4,54	-3,97	-3,53	-3,18	-2,89	-2,65	-2,44	-2,27	-2,12	-1,98	-1,87	-1,72	-1,54	-1,39	-1,26	-1,15	-1,05	-0,97	-0,90	-0,83	-0,77	-0,71	-0,66	-0,62	-0,58	-0,54
	III	-6,36	-5,30	-4,54	-3,97	-3,53	-3,18	-2,89	-2,65	-2,44	-2,27	-2,12	-1,98	-1,87	-1,50	-1,22	-1,39	-0,92	-0,78	-0,66	-0,57	-0,49	-0,43	-0,38	-0,33	-0,29	-0,26	-0,23	-0,21
240	I	-7,63	-6,36	-5,45	-4,77	-4,24	-3,81	-3,47	-3,18	-2,93	-2,72	-2,49	-2,18	-1,93	-1,73	-1,55	-1,40	-1,27	-1,15	-1,05	-0,98	-0,90	-0,83	-0,77	-0,72	-0,67	-0,62	-0,58	-0,55
	II	-7,63	-6,36	-5,45	-4,77	-4,24	-3,81	-3,47	-3,18	-2,93	-2,72	-2,49	-2,18	-1,93	-1,73	-1,55	-1,40	-1,27	-1,15	-1,05	-0,98	-0,90	-0,83	-0,77	-0,70	-0,63	-0,58	-0,53	-0,48
	III	-7,63	-6,36	-5,45	-4,77	-4,24	-3,81	-3,47	-3,18	-2,93	-2,72	-1,87	-1,25	-1,93	-0,69	-0,47	-0,31	-0,19	-0,10	-0,03	0,00	0,00	0,00	0,00	0,00	0,00	0,00	0,00	0,00

Colour groups: ***I*** *- very light colours,* ***II*** *- light colours,* ***III*** *- dark colours*
Linear support has been assumed. Panels mounted by loop through connectors with aluminium or steel washers. Support width: min. 40mm.

Table 24. 1 span arrangement - maximum characteristic loads for BALEXTHERM-MW-R sandwich panels with mineral wool core, in claddings of 0,50/0,50 mm thickness, profile types: T/L, 40mm outer support width. Direction of force - TO THE SUPPORT

BALEXTHERM MW-R																									
Core thickness	Colour group	Maximum loads [kN/m²] for the span L[m]																							
		0,50	0,75	1,00	1,25	1,50	1,75	2,00	2,25	2,50	2,75	3,00	3,25	3,50	3,75	4,00	4,25	4,50	4,75	5,00	5,25	5,50	5,75	6,00
100/145	I	7,74	5,10	3,78	2,99	2,36	1,80	1,43	1,18	0,99	0,86	0,75	0,66	0,59	0,52	0,47	0,42	0,39	0,35	0,32	0,29	0,27	0,25	0,23
	II	7,74	5,10	3,78	2,99	2,36	1,80	1,43	1,18	0,99	0,86	0,75	0,66	0,59	0,52	0,47	0,42	0,39	0,35	0,32	0,29	0,27	0,25	0,23
	III	7,74	5,10	3,78	2,99	2,36	1,80	1,43	1,18	0,99	0,86	0,75	0,66	0,59	0,52	0,47	0,42	0,39	0,35	0,32	0,29	0,27	0,25	0,23
120/165	I	7,72	5,08	3,76	2,97	2,44	2,01	1,62	1,34	1,13	0,99	0,87	0,76	0,68	0,61	0,55	0,50	0,45	0,41	0,38	0,35	0,32	0,29	0,27
	II	7,72	5,08	3,76	2,97	2,44	2,01	1,62	1,34	1,13	0,99	0,87	0,76	0,68	0,61	0,55	0,50	0,45	0,41	0,38	0,35	0,32	0,29	0,27
	III	7,72	5,08	3,76	2,97	2,44	2,01	1,62	1,34	1,13	0,99	0,87	0,76	0,68	0,61	0,55	0,50	0,45	0,41	0,38	0,35	0,32	0,29	0,27
150/195	I	7,69	5,06	3,74	2,94	2,41	2,04	1,75	1,53	1,35	1,17	1,02	0,92	0,82	0,74	0,67	0,61	0,56	0,51	0,47	0,43	0,40	0,37	0,34
	II	7,69	5,06	3,74	2,94	2,41	2,04	1,75	1,53	1,35	1,17	1,02	0,92	0,82	0,74	0,67	0,61	0,56	0,51	0,47	0,43	0,40	0,37	0,34
	III	7,69	5,06	3,74	2,94	2,41	2,04	1,75	1,53	1,35	1,17	1,02	0,92	0,82	0,74	0,67	0,61	0,56	0,51	0,47	0,43	0,40	0,37	0,34
160/205	I	7,68	5,05	3,73	2,93	2,41	2,03	1,75	1,52	1,35	1,20	1,08	0,97	0,87	0,78	0,71	0,65	0,59	0,54	0,50	0,46	0,42	0,39	0,36
	II	7,68	5,05	3,73	2,93	2,41	2,03	1,75	1,52	1,35	1,20	1,08	0,97	0,87	0,78	0,71	0,65	0,59	0,54	0,50	0,46	0,42	0,39	0,36
	III	7,68	5,05	3,73	2,93	2,41	2,03	1,75	1,52	1,35	1,20	1,08	0,97	0,87	0,78	0,71	0,65	0,59	0,54	0,50	0,46	0,42	0,39	0,36

Colour groups: ***I*** *- very light colours,* ***II*** *- light colours,* ***III*** *- dark colours*
Linear support has been assumed. Panels mounted by loop through connectors with aluminium or steel washers. Support width: min. 40mm.

Table 25. 2 span arrangement - maximum characteristic loads for BALEXTHERM-MW-R sandwich panels with mineral wool core, in claddings of 0,50/0,50 mm thickness, profile types: T/L, 40mm outer support width, 60mm inner support width.
Direction of force - TO THE SUPPORT

BALEXTHERM MW-R																									
Core thickness	Colour group	Maximum loads [kN/m²] for the span L[m]																							
		0,50	0,75	1,00	1,25	1,50	1,75	2,00	2,25	2,50	2,75	3,00	3,25	3,50	3,75	4,00	4,25	4,50	4,75	5,00	5,25	5,50	5,75	6,00
100/145	I	5,76	3,78	2,79	2,20	1,80	1,52	1,30	1,14	0,98	0,86	0,75	0,66	0,59	0,00	0,00	0,00	0,00	0,00	0,00	0,00	0,00	0,00	0,00
	II	5,76	3,78	2,79	2,20	1,80	1,52	1,30	1,14	0,98	0,86	0,75	0,66	0,59	0,00	0,00	0,00	0,00	0,00	0,00	0,00	0,00	0,00	0,00
	III	5,76	3,78	2,79	2,20	1,80	1,52	1,30	1,14	0,98	0,86	0,75	0,66	0,59	0,00	0,00	0,00	0,00	0,00	0,00	0,00	0,00	0,00	0,00
120/165	I	5,74	3,76	2,77	2,18	1,78	1,50	1,29	1,12	0,99	0,89	0,80	0,72	0,66	0,60	0,00	0,00	0,00	0,00	0,00	0,00	0,00	0,00	0,00
	II	5,74	3,76	2,77	2,18	1,78	1,50	1,29	1,12	0,99	0,89	0,80	0,72	0,66	0,60	0,00	0,00	0,00	0,00	0,00	0,00	0,00	0,00	0,00
	III	5,74	3,76	2,77	2,18	1,78	1,50	1,29	1,12	0,99	0,89	0,80	0,72	0,66	0,60	0,00	0,00	0,00	0,00	0,00	0,00	0,00	0,00	0,00
150/195	I	5,72	3,74	2,75	2,15	1,75	1,47	1,26	1,09	0,97	0,87	0,77	0,70	0,63	0,57	0,52	0,00	0,00	0,00	0,00	0,00	0,00	0,00	0,00
	II	5,72	3,74	2,75	2,15	1,75	1,47	1,26	1,09	0,97	0,87	0,77	0,70	0,63	0,57	0,52	0,00	0,00	0,00	0,00	0,00	0,00	0,00	0,00
	III	5,72	3,74	2,75	2,15	1,75	1,47	1,26	1,09	0,97	0,87	0,77	0,70	0,63	0,57	0,52	0,00	0,00	0,00	0,00	0,00	0,00	0,00	0,00
160/205	I	5,71	3,73	2,74	2,14	1,75	1,46	1,25	1,08	0,97	0,86	0,77	0,69	0,62	0,57	0,52	0,00	0,00	0,00	0,00	0,00	0,00	0,00	0,00
	II	5,71	3,73	2,74	2,14	1,75	1,46	1,25	1,08	0,97	0,86	0,77	0,69	0,62	0,57	0,52	0,00	0,00	0,00	0,00	0,00	0,00	0,00	0,00
	III	5,71	3,73	2,74	2,14	1,75	1,46	1,25	1,08	0,97	0,86	0,77	0,69	0,62	0,57	0,52	0,00	0,00	0,00	0,00	0,00	0,00	0,00	0,00

Colour groups: ***I*** *- very light colours,* ***II*** *- light colours,* ***III*** *- dark colours*
Linear support has been assumed. Panels mounted by loop through connectors with aluminium or steel washers. Support width: min. 40mm.

Table 26. 3 span arrangement - maximum characteristic loads for BALEXTHERM-MW-R sandwich panels with mineral wool core, in claddings of 0,50/0,50 mm thickness, profile types: T/L, 40mm outer support width, 60mm inner support width.
Direction of force - TO THE SUPPORT

BALEXTHERM MW-R																									
Core thickness	Colour group	Maximum loads [kN/m²] for the span L[m]																							
		0,50	0,75	1,00	1,25	1,50	1,75	2,00	2,25	2,50	2,75	3,00	3,25	3,50	3,75	4,00	4,25	4,50	4,75	5,00	5,25	5,50	5,75	6,00
100/145	I	5,76	3,78	2,79	2,20	1,80	1,52	1,30	1,14	0,98	0,86	0,75	0,66	0,59	0,00	0,00	0,00	0,00	0,00	0,00	0,00	0,00	0,00	0,00
	II	5,76	3,78	2,79	2,20	1,80	1,52	1,30	1,14	0,98	0,86	0,75	0,66	0,59	0,00	0,00	0,00	0,00	0,00	0,00	0,00	0,00	0,00	0,00
	III	5,76	3,78	2,79	2,20	1,80	1,52	1,30	1,14	0,98	0,86	0,75	0,66	0,59	0,00	0,00	0,00	0,00	0,00	0,00	0,00	0,00	0,00	0,00
120/165	I	5,74	3,76	2,77	2,18	1,78	1,50	1,29	1,12	0,99	0,89	0,80	0,72	0,66	0,00	0,00	0,00	0,00	0,00	0,00	0,00	0,00	0,00	0,00
	II	5,74	3,76	2,77	2,18	1,78	1,50	1,29	1,12	0,99	0,89	0,80	0,72	0,66	0,00	0,00	0,00	0,00	0,00	0,00	0,00	0,00	0,00	0,00
	III	5,74	3,76	2,77	2,18	1,78	1,50	1,29	1,12	0,99	0,89	0,80	0,72	0,66	0,00	0,00	0,00	0,00	0,00	0,00	0,00	0,00	0,00	0,00
150/195	I	5,72	3,74	2,75	2,15	1,75	1,47	1,26	1,09	0,97	0,87	0,77	0,70	0,63	0,57	0,00	0,00	0,00	0,00	0,00	0,00	0,00	0,00	0,00
	II	5,72	3,74	2,75	2,15	1,75	1,47	1,26	1,09	0,97	0,87	0,77	0,70	0,63	0,57	0,00	0,00	0,00	0,00	0,00	0,00	0,00	0,00	0,00
	III	5,72	3,74	2,75	2,15	1,75	1,47	1,26	1,09	0,97	0,87	0,77	0,70	0,63	0,57	0,00	0,00	0,00	0,00	0,00	0,00	0,00	0,00	0,00
160/205	I	5,71	3,73	2,74	2,14	1,75	1,46	1,25	1,08	0,97	0,86	0,77	0,69	0,62	0,57	0,52	0,00	0,00	0,00	0,00	0,00	0,00	0,00	0,00
	II	5,71	3,73	2,74	2,14	1,75	1,46	1,25	1,08	0,97	0,86	0,77	0,69	0,62	0,57	0,52	0,00	0,00	0,00	0,00	0,00	0,00	0,00	0,00
	III	5,71	3,73	2,74	2,14	1,75	1,46	1,25	1,08	0,97	0,86	0,77	0,69	0,62	0,57	0,52	0,00	0,00	0,00	0,00	0,00	0,00	0,00	0,00

Colour groups: ***I*** *- very light colours,* ***II*** *- light colours,* ***III*** *- dark colours*
Linear support has been assumed. Panels mounted by loop through connectors with aluminium or steel washers. Support width: min. 40mm.

Table 27. 1 span arrangement - maximum characteristic loads for BALEXTHERM-MW-R sandwich panels with mineral wool core, in claddings of 0,50/0,50 mm thickness, profile types: T/L, 40mm outer support width. Direction of force - FROM THE SUPPORT

BALEXTHERM MW-R																									
Core thickness	Colour group	Maximum loads [kN/m²] for the span L[m]																							
		0,50	0,75	1,00	1,25	1,50	1,75	2,00	2,25	2,50	2,75	3,00	3,25	3,50	3,75	4,00	4,25	4,50	4,75	5,00	5,25	5,50	5,75	6,00
100/145	I	-21,21	-11,82	-8,40	-6,68	-5,10	-4,09	-3,42	-2,94	-2,59	-2,31	-2,09	-1,91	-1,76	-1,63	-1,52	-1,39	-1,25	-1,13	-1,03	-0,95	-0,88	-0,81	-0,75
	II	-21,21	-11,82	-8,40	-6,68	-5,10	-4,09	-3,42	-2,94	-2,59	-2,31	-2,09	-1,91	-1,76	-1,63	-1,52	-1,39	-1,25	-1,13	-1,03	-0,95	-0,88	-0,81	-0,75
	III	-21,20	-11,82	-8,40	-6,68	-5,10	-4,09	-3,42	-2,94	-2,59	-2,31	-2,09	-1,91	-1,76	-1,63	-1,52	-1,39	-1,25	-1,13	-1,03	-0,95	-0,88	-0,81	-0,71
120/165	I	-22,29	-12,89	-9,45	-7,67	-5,84	-4,72	-3,96	-3,42	-3,01	-2,70	-2,44	-2,23	-2,06	-1,91	-1,79	-1,68	-1,52	-1,37	-1,25	-1,14	-1,05	-0,98	-0,91
	II	-22,29	-12,89	-9,45	-7,67	-5,84	-4,72	-3,96	-3,42	-3,01	-2,70	-2,44	-2,23	-2,06	-1,91	-1,79	-1,68	-1,52	-1,37	-1,25	-1,14	-1,05	-0,98	-0,91
	III	-22,28	-12,89	-9,45	-7,67	-5,84	-4,72	-3,96	-3,42	-3,01	-2,70	-2,44	-2,23	-2,06	-1,91	-1,79	-1,68	-1,52	-1,37	-1,25	-1,14	-1,05	-0,98	-0,91
150/195	I	-23,92	-14,51	-11,03	-9,01	-6,94	-5,65	-4,77	-4,13	-3,65	-3,27	-2,97	-2,72	-2,51	-2,33	-2,18	-2,05	-1,93	-1,79	-1,63	-1,49	-1,37	-1,27	-1,17
	II	-23,92	-14,51	-11,03	-9,01	-6,94	-5,65	-4,77	-4,13	-3,65	-3,27	-2,97	-2,72	-2,51	-2,33	-2,18	-2,05	-1,93	-1,79	-1,63	-1,49	-1,37	-1,27	-1,17
	III	-23,92	-14,51	-11,03	-9,01	-6,94	-5,65	-4,77	-4,13	-3,65	-3,27	-2,97	-2,72	-2,51	-2,33	-2,18	-2,05	-1,93	-1,79	-1,63	-1,49	-1,37	-1,27	-1,17
160/205	I	-24,46	-15,05	-11,57	-9,45	-7,30	-5,96	-5,04	-4,37	-3,86	-3,46	-3,14	-2,88	-2,66	-2,47	-2,31	-2,17	-2,05	-1,94	-1,76	-1,61	-1,48	-1,37	-1,27
	II	-24,46	-15,05	-11,57	-9,45	-7,30	-5,96	-5,04	-4,37	-3,86	-3,46	-3,14	-2,88	-2,66	-2,47	-2,31	-2,17	-2,05	-1,94	-1,76	-1,61	-1,48	-1,37	-1,27
	III	-24,46	-15,05	-11,57	-9,45	-7,30	-5,96	-5,04	-4,37	-3,86	-3,46	-3,14	-2,88	-2,66	-2,47	-2,31	-2,17	-2,05	-1,94	-1,76	-1,61	-1,48	-1,37	-1,27

Colour groups: ***I*** *- very light colours,* ***II*** *- light colours,* ***III*** *- dark colours*
Linear support has been assumed. Panels mounted by loop through connectors with aluminium or steel washers. Support width: min. 40mm.

Table 28. 2 span arrangement - maximum characteristic loads for BALEXTHERM-MW-R sandwich panels with mineral wool core, in claddings of 0,50/0,50 mm thickness, profile types: T/L, 40mm outer support width, 60mm inner support width.
Direction of force - FROM THE SUPPORT

BALEXTHERM MW-R																									
Core thickness	Colour group	Maximum loads [kN/m²] for the span L[m]																							
		0,50	0,75	1,00	1,25	1,50	1,75	2,00	2,25	2,50	2,75	3,00	3,25	3,50	3,75	4,00	4,25	4,50	4,75	5,00	5,25	5,50	5,75	6,00
100/145	I	-21,20	-11,83	-7,71	-5,39	-4,07	-3,23	-2,66	-2,25	-1,94	-1,71	-1,52	-1,37	-1,25	0,00	0,00	0,00	0,00	0,00	0,00	0,00	0,00	0,00	0,00
	II	-21,20	-11,83	-7,47	-5,17	-3,86	-3,04	-2,48	-2,09	-1,80	-1,57	-1,40	-1,26	-1,15	0,00	0,00	0,00	0,00	0,00	0,00	0,00	0,00	0,00	0,00
	III	-21,20	-11,82	-7,11	-4,83	-3,55	-2,75	-2,22	-1,85	-1,58	-1,38	-1,22	-1,10	-1,15	0,00	0,00	0,00	0,00	0,00	0,00	0,00	0,00	0,00	0,00
120/165	I	-22,29	-12,30	-7,67	-5,42	-4,13	-3,30	-2,73	-2,32	-2,01	-1,77	-1,58	-1,43	-1,30	-1,03	0,00	0,00	0,00	0,00	0,00	0,00	0,00	0,00	0,00
	II	-22,29	-12,05	-7,43	-5,20	-3,92	-3,10	-2,55	-2,15	-1,85	-1,63	-1,45	-1,31	-1,19	-1,03	0,00	0,00	0,00	0,00	0,00	0,00	0,00	0,00	0,00
	III	-22,29	-11,68	-7,08	-4,86	-3,60	-2,81	-2,28	-1,90	-1,62	-1,42	-1,26	-1,13	-1,03	-0,96	0,00	0,00	0,00	0,00	0,00	0,00	0,00	0,00	0,00
150/195	I	-23,63	-11,79	-7,48	-5,36	-4,12	-3,32	-2,76	-2,35	-2,05	-1,81	-1,62	-1,47	-1,34	-1,24	-0,95	0,00	0,00	0,00	0,00	0,00	0,00	0,00	0,00
	II	-23,38	-11,55	-7,25	-5,13	-3,91	-3,12	-2,57	-2,18	-1,88	-1,66	-1,48	-1,34	-1,22	-1,13	-0,95	0,00	0,00	0,00	0,00	0,00	0,00	0,00	0,00
	III	-23,00	-11,18	-6,89	-4,79	-3,58	-2,81	-2,28	-1,91	-1,64	-1,43	-1,25	-1,11	-1,22	-0,95	-0,88	0,00	0,00	0,00	0,00	0,00	0,00	0,00	0,00
160/205	I	-23,13	-11,62	-7,41	-5,33	-4,11	-3,31	-2,76	-2,36	-2,05	-1,81	-1,63	-1,47	-1,35	-1,25	-1,16	0,00	0,00	0,00	0,00	0,00	0,00	0,00	0,00
	II	-22,88	-11,38	-7,17	-5,10	-3,89	-3,11	-2,57	-2,18	-1,88	-1,66	-1,48	-1,34	-1,23	-1,13	-1,05	0,00	0,00	0,00	0,00	0,00	0,00	0,00	0,00
	III	-22,52	-11,01	-6,82	-4,76	-3,57	-2,80	-2,28	-1,91	-1,63	-1,43	-1,23	-1,08	-1,23	-0,93	-0,86	0,00	0,00	0,00	0,00	0,00	0,00	0,00	0,00

Colour groups: ***I*** *- very light colours,* ***II*** *- light colours,* ***III*** *- dark colours*
Linear support has been assumed. Panels mounted by loop through connectors with aluminium or steel washers. Support width: min. 40mm.

Table 28. 3 span arrangement - maximum characteristic loads for BALEXTHERM-MW-R sandwich panels with mineral wool core, in claddings of 0,50/0,50 mm thickness, profile types: T/L, 40mm outer support width, 60mm inner support width.
Direction of force - FROM THE SUPPORT

BALEXTHERM MW-R																									
Core thickness	Colour group	Maximum loads [kN/m²] for the span L[m]																							
		0,50	0,75	1,00	1,25	1,50	1,75	2,00	2,25	2,50	2,75	3,00	3,25	3,50	3,75	4,00	4,25	4,50	4,75	5,00	5,25	5,50	5,75	6,00
100/145	I	-21,21	-11,83	-8,40	-6,15	-4,62	-3,66	-3,03	-2,57	-2,23	-1,97	-1,77	-1,60	-1,38	0,00	0,00	0,00	0,00	0,00	0,00	0,00	0,00	0,00	0,00
	II	-21,21	-11,83	-8,40	-5,92	-4,42	-3,49	-2,87	-2,44	-2,11	-1,87	-1,67	-1,51	-1,38	0,00	0,00	0,00	0,00	0,00	0,00	0,00	0,00	0,00	0,00
	III	-21,20	-11,83	-8,27	-5,58	-4,12	-3,23	-2,64	-2,23	-1,93	-1,71	-1,53	-1,38	-1,38	0,00	0,00	0,00	0,00	0,00	0,00	0,00	0,00	0,00	0,00
120/165	I	-22,28	-12,89	-8,79	-6,12	-4,63	-3,70	-3,07	-2,62	-2,28	-2,02	-1,82	-1,65	-1,51	0,00	0,00	0,00	0,00	0,00	0,00	0,00	0,00	0,00	0,00
	II	-22,29	-12,89	-8,53	-5,89	-4,42	-3,52	-2,91	-2,47	-2,15	-1,91	-1,71	-1,56	-1,43	0,00	0,00	0,00	0,00	0,00	0,00	0,00	0,00	0,00	0,00
	III	-22,29	-12,89	-8,14	-5,55	-4,12	-3,24	-2,66	-2,26	-1,96	-1,74	-1,56	-1,42	-1,30	0,00	0,00	0,00	0,00	0,00	0,00	0,00	0,00	0,00	0,00
150/195	I	-23,92	-13,70	-8,47	-5,97	-4,56	-3,67	-3,06	-2,62	-2,30	-2,04	-1,84	-1,68	-1,54	-1,43	0,00	0,00	0,00	0,00	0,00	0,00	0,00	0,00	0,00
	II	-23,91	-13,42	-8,21	-5,74	-4,35	-3,47	-2,89	-2,47	-2,16	-1,92	-1,73	-1,58	-1,45	-1,34	0,00	0,00	0,00	0,00	0,00	0,00	0,00	0,00	0,00
	III	-23,92	-13,01	-7,83	-5,39	-4,03	-3,19	-2,63	-2,24	-1,95	-1,73	-1,56	-1,42	-1,31	-1,21	0,00	0,00	0,00	0,00	0,00	0,00	0,00	0,00	0,00
160/205	I	-24,46	-13,46	-8,36	-5,91	-4,53	-3,65	-3,05	-2,62	-2,29	-2,04	-1,84	-1,68	-1,55	-1,44	-1,21	0,00	0,00	0,00	0,00	0,00	0,00	0,00	0,00
	II	-24,47	-13,18	-8,10	-5,68	-4,31	-3,45	-2,87	-2,46	-2,15	-1,91	-1,73	-1,58	-1,45	-1,35	-1,21	0,00	0,00	0,00	0,00	0,00	0,00	0,00	0,00
	III	-24,46	-12,77	-7,72	-5,33	-3,99	-3,16	-2,61	-2,22	-1,94	-1,72	-1,55	-1,41	-1,30	-1,21	-1,21	0,00	0,00	0,00	0,00	0,00	0,00	0,00	0,00

Colour groups: ***I*** *- very light colours,* ***II*** *- light colours,* ***III*** *- dark colours*
Linear support has been assumed. Panels mounted by loop through connectors with aluminium or steel washers. Support width: min. 40mm.

13. THERMAL INSULATION PROPERTIES

BALEXTHERM-MW-W-ST, BALEXTHERM-MW-W-PLUS, BALEXTHERM-MW-D-W-ST, BALEXTHERM-MW-LT-W-ST wall sandwich panels and BALEXTHERM-MW-R roof sandwich panels have very good thermal insulation parameters.

Tests and calculations conducted in the Institute of Building Technology in Warsaw in the Thermal Physics Department, the purpose of which was to specify the heat conductivity coefficient of mineral wool being the panel core and the heat conductivity coefficient of the partition, have confirmed high quality and consistency of parameters in BALEXTHERM-MW panels achieved thanks to using raw materials of the highest quality and continuous control of all production stages.

The tested heat conductivity coefficient for the sandwich panel core is λ_{obl} = 0,040W/mK in relation to the average partition temperature of 10°C.

The calculations of the U_c heat conductivity coefficient take into account the linear thermal bridge occurring in the joint of sandwich panels, and local thermal bridges occurring in places where the panels are fastened to the bearing structure by connectors.

The table below shows U_c heat conductivity coefficients for a partition made of BALEXTHERM roof and wall panels.

Table 30. U_c partition heat conductivity coefficients.

Panel type	Panel core thickness [mm]	U_c [W/m²K]
BALEXTHERM-MW-W-ST	80	0,47
	100	0,38
	120	0,32
	150	0,26
	160	0,24
	180	0,22
	200	0,19
	240	0,17
BALEXTHERM-MW-D-W-ST DEFENDER	200	0,19
	240	0,17
BALEXTHERM-MW-LT-W-ST LIGHT	80	0,47
	100	0,38
	120	0,32
	150	0,26
	160	0,24
	180	0,22
	200	0,19
	240	0,16
BALEXTHERM-MW-W-PLUS 1050 and 1000	80	0,48
	100	0,38
	120	0,32
	150	0,26
	160	0,24
	180	0,22
	200	0,20
BALEXTHERM-MW-R	100	0,38
	120	0,32
	150	0,26
	160	0,24

The scope of using BALEXTHERM-MW wall and roof sandwich panels has been determined on the basis of conducted test, calculations and requirements of the Ordinance of the Minister for Infrastructure on technical conditions to be met by buildings and their location (Journal of Laws 75/2002 pos. 690, as amended, year 2013), for production facilities, warehouses, outhouses and public utility buildings.

BALEXTHERM-MW-W-ST, BALEXTHERM-MW-LT-W-ST and BALEXTHERM-MW-W-PLUS wall panels with core thicknesses from 160mm have thermal insulation properties that make them suitable for use as full external walls and walls with openings for rooms with calculation temperatures t_i > 16°C. The required heat conductivity coefficient for external walls should be U_{max} = 0,25 [W/m²K] at t_i ≥ 16°C (to 01.01.2017).

BALEXTHERM-MW-W-ST, BALEXTHERM-MW-D-W-ST, BALEXTHERM-MW-LT-W-ST and BALEXTHERM-MW-W-PLUS wall panels with core thickness from 100mm have thermal insulation properties that make them suitable for use as full external walls and walls with openings for rooms with calculation temperatures 8°C < t_i ≤ 16°C. The required heat conductivity coefficient for external walls should be U_{max} = 0,45 [W/m²K] przy 8°C ≤ t_i < 16°C.

BALEXTHERM-MW-R roof panels with core thickness from 150/195mm have thermal insulation properties that make them suitable for use as roof coverings for rooms with calculation temperatures 8°C < t_i ≤ 16°C. The required heat conductivity coefficient for roofs and ceilings in unheated attics or over passes should be U_{max} = 0,30 [W/m²K] at 8°C ≤ t_i < 16°C.

14. FIRE SAFETY

Fire classification mineral wool core BALEXTHERM-MW sandwich panels

BALEXTHERM-MW mineral wool core sandwich panels are the building elements of a certain fire resistance class and so they should meet the requirements of fire resistance and fire dispersion specified in the Ordinance of the Minister for Infrastructure of 12th April 2002 on technical requirements for buildings and their location (Journal of Laws No. 75 pos. 690, 2002 as amended).

In accordance with § 216 and §272, external walls and roof coverings of buildings are subject to the following fire safety classifications:
- fire resistance
- fire dispersion degree.

Basing on test reports, the Fire Testing Unit of the Institute of Building Technology in Warsaw has classified, according to the above requirements, the panels in the following manner:
- fire resistance of non-load bearing walls of BALEXTHERM-MW-W-ST, BALEXTHERM-MW-D-W-ST, BALEXTHERM-MW-LT-W-ST and BALEXTHERM-MW-W-PLUS mineral wool core sandwich panels
- fire dispersion through walls, with fire from outside and inside (BALEXTHERM- MW-WST, BALEXTHERM-MW-D-W-ST, BALEXTHERM-MW-LT-W-ST, BALEXTHERM-MW-W-PLUS)
- fire resistance of roof coverings made of BALEXTHERM-MW-R mineral wool core roof panels
- resistance of the roof to external fire (BALEXTHERM-MW-R).

BALEXTHERM-MW sandwich panels have been classified as a NRO non fire dispersing product, in accordance with the standards PN-90/B-02867, PN-B-02872:1996.

Table 31. Fire classification of BALEXTHERM-MW-W-ST, BALEXTHERM-MW-LT-W-ST, BALEXTHERM-MW-D-LT-W-ST and BALEXTHERM-MW-W-PLUS sandwich panels.

Panel type	Thickness [mm]	Fire resistance	Reaction to fire PN-EN 13501-1+A1; PN-EN 13823
BALEXTHERM-MW-W-ST	80	-	A2-s1,d0
	100-120	EI 120	
	150-240	EI 240	
BALEXTHERM-MW-D-W-ST	200-240	EI 240	
BALEXTHERM-MW-LT-W-ST	80	-	
	100-120	EI 90 / EW 120	
	150-180	EI 180	
	200-240	EI 240 / EW 120	
BALEXTHERM-MW-W-PLUS	80	-	A2-s2,d0
	100	EI 30	
	120-200	EI 60	

EI X classification means that the criterion of tightness and fire insulation properties of the covering wall is maintained for the time of at least X minutes. If there is exposure to fire from the side of the structure, it must have at least R X class, which means that fire bearing capacity of the construction must be maintained for the same or longer time.

Table 32. Fire classification BALEXTHERM-MW-R sandwich panels.

Panel type	Thickness [mm]	Fire resistance	Resistance of the roof to external fire influence PN-EN 13501-5
BALEXTHERM-MW-R	100	-	$B_{roof}(t_1)$
	120-160	REI 90	$B_{roof}(t_1)$

** M_{pr} - span moment, M_{pd} - support moment; Calculations should assume snow load of 0,2xS_k, where S_k - typical snow load on the ground in Poland acc. to PN-EN 1991-1-3:2005*

REI-90 classification means that the criteria of bearing capacity, tightness and fire resistance are maintained for at least 90 minutes. As for roof resistance to the influence of external fire, BALEXTHERM-MW-R panel roof covering has been classified as $B_{ROOF}(t_1)$, which means non-dispersing fire, according to PN-EN 13501-5. $B_{ROOF}(t_1)$ is valid for roofs with a pitch up to 20°.

15. CORROSION RESISTANCE

In accordance with the tests conducted in the Institute of Building Technology in Warsaw, in the Department of Building Coatings Durability and Protection, BALEXTHERM mineral wool core sandwich panels meet the requirements of PN-EN ISO 12944-2 for the classes C1 to C4 and C5 upon completion of the questionnaire.

BALEXTHERM panels – with zinc coated claddings (Z275) and organic claddings: SP 25 or SP 35 or PVDF 25 or HPS200 or PCV(F) 120 on the exposed side may be used in environments with corrosion categories C1, C2, C3, and in the case of SP 15 cladding on the exposed side, in the environments: C1, C2, according to the PN-EN ISO 12944-2 standard.

BALEXTHERM panels – with AZ185 aluminium-zinc coating may be used in environments with corrosion categories: C1, C2, C3 according to the PN-EN ISO 12944-2 standard

BALEXTHERM panels – with zinc coating (Z275) and CESAR PUR 55 cladding may be used in environments with corrosion categories C1, C2, C3, C4 according to the PN-EN ISO 12944-2 standard.

Corrosion categories and examples of typical environments acc. to PN-EN ISO 12944-2

C1 corrosion category
- interiors – heated buildings with clean ambience, e.g. offices, shops, schools, hotels

C2 corrosion category
- exteriors – ambiences of little contamination; mainly rural areas
- interiors – unheated buildings with possible condensation, e.g. warehouses, sports halls

C3 corrosion category
- exteriors – urban and industrial ambiences; average contamination with sulphur oxide (IV); water bank and shore areas of little salinity
- interiors – production interiors of high humidity and certain air pollution, e.g. food production facilities, laundries, breweries, milk production units

C4 corrosion category
- exteriors – industrial areas and water shore areas of moderate salinity
- interiors – chemical plants, swimming pools, ship repair yards for ships and boats

C5 corrosion category
- exteriors – industrial areas of high humidity and aggressive ambience
- interiors – building structures or areas with virtually constant condensation and high contamination levels

RC5 resistant category claddings declared by the steel manufacturer may be used for BALEXTHERM panels.

16. SOUND INSULATION PROPERTIES

BALEXTHERM-MW sandwich panels have the following acoustic insulation coefficients:

BALEXTHERM-MW-W-ST and BALEXTHERM-MW-W-PLUS wall panels, thickness range 80mm to 230mm

R_W=32dB, R_{A1}=29dB, R_{A2}=28dB

An exception is BALEXTHERM-MW-W-ST 160 panel

R_W= 33dB, R_{A1}= 31dB, R_{A2}=29dB

Sound absorption properties of BALEXTHERM MWW-ST and BALEXTHERM-MW-W-PLUS mineral wool core wall sandwich panels in two side claddings of steel sheet, with thickness range from 80mm to 230mm may be generally expressed by absorption coefficient α_w =0,2 and absorption class E.

BALEXTHERM-MW-R **roof panels**, thickness range 100mm to 160mm

R_W=33dB, R_{A1}=32dB, R_{A2}=30dB

Sound absorption properties of BALEXTHERM-MW-R mineral wool core roof sandwich panels in two side claddings of steel sheet, with thickness range from 100mm to 160mm may be generally expressed by absorption coefficient α_w =0,15 (L) and absorption class E.

R_W - weighted specific acoustic insulation coefficient,
R_{A1} - specific acoustic insulation assessment coefficient (determined in relation to the "flat" band noise),
R_{A2} - specific acoustic insulation assessment coefficient (determined in relation to low frequency band noise).

The basis for classifying building partitions made of sandwich panels are the values of one digit coefficients determined on the basis of the specific acoustic insulation measurements taken in laboratory conditions, acc. to PN-EN ISO 10140-2:2011 and calculated acc. to PN-EN ISO 717-1:1999.

The requirements for acoustic insulation properties of partitions in general purpose buildings are given in the PN-B-02151-3:1999 standard. For cases that are not included in the standard, in particular in industrial buildings, housings and internal partitions, the requirements should be established individually.

Considering the acoustic properties of BALEXTHERM-MW sandwich panels (specified in the abovementioned coefficients) it should be assumed that, from the acoustics point of view, BALEXTHERM-MW sandwich panels may be used in the following buildings and facilities:

- as housing for walls and roofs of industrial and sports halls, production and warehouse buildings

- for commerce and service pavilions, food and catering facilities, building site supply bases, administration and social buildings – if the requirements for acoustic insulation for a given partition are not higher than the ones given above or if they meet individually determined acoustic requirements.

- as external walls of residential buildings

- for structures and facilities where there are no acoustic requirements

17. FASTENERS

BALEXTHERM sandwich panels are mounted to the steel structure by self-drilling connectors. This eliminated the need to drill preliminary loop through openings in panels and the construction. Moreover, self-drilling connectors increase security of fastening and limit the number of used tools. In the case of self-drilling connectors new drilling blades are always used, because these connectors are designated to be used once only, and this has an influence on the durability of the connection.

Self-drilling connectors are used for fastening sandwich panels to the steel structure of maximum wall thickness of 12 mm. The connectors are made of hardened coal steel, with a surface corrosion protection layer.

All connectors have washers with vulcanised EPDM. Using EPDM increases durability and tightness of the connection.

- ZD6 – a screw with screwing capacity up to 6 mm, for cold rolled steel substrates
- ZD12 - a screw with screwing capacity up to 12 mm, for hot rolled steel substrates
- ZD16 - a screw with screwing capacity up to 16 mm, for hot rolled steel substrates
- A screw for wood and concrete – for direct fastening to concrete and wood substrates. Drilling the sandwich panel with a 5 mm steel drill prior to the assembly is recommended. A preliminary opening should be made in the concrete substrate with a 5 mm concrete drill.
- Self-threading screw – for steel substrates of over 12 mm thickness. A preliminary opening of 5,8 mm diameter must be made in the sandwich panel and the steel structure prior to the assembly.

18. FASTENING ROOF PANELS LENGTHWISE

Recommended roof pitch for BALEXTHERM-MW-R roof panels is:

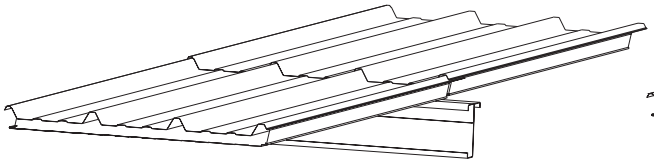

>7 % - for panels joined at length or with roof skylights

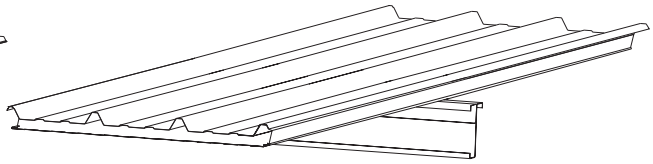

>5 % - for continuous panels and without skylights

BALEXTHERM-MW-R panels have endings, shaped at the stage of production, which facilitate assembly of gutters at eaves or longitudinal joining of panels.

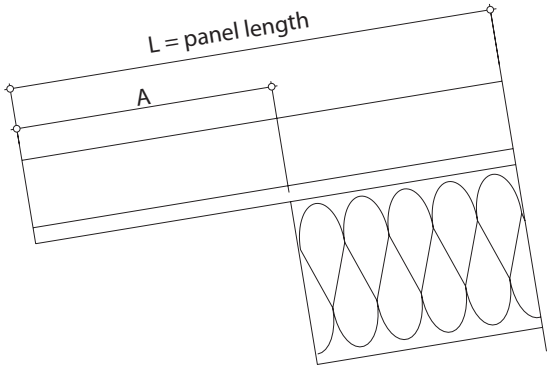

A
- standard 50 mm with eaves
- standard 150 mm with overlap
- max 200 mm with overlap
- min 10 mm without overlap

As a standard, BALEXTHERM-MW-R roof panels are produced in right hand version. They may be produced in the left hand version at the client`s request.

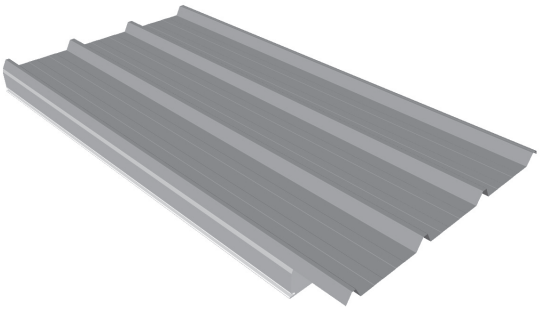

RIGHT Panel

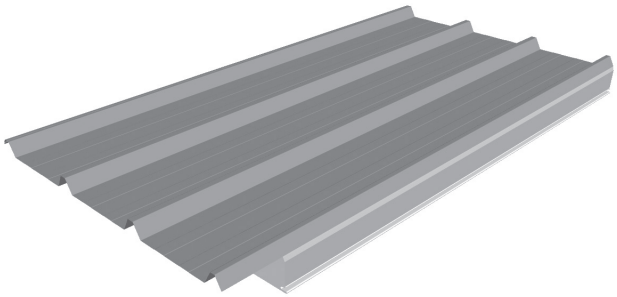

LEFT Panel

19. GENERAL GUIDELINES ON ASSEMBLY

Prior to the assembly, it is recommended that the bearing structure is inspected for its making and compliance with the design.

BALEXTHERM sandwich panels are secured against debris and damage by protective foil, put on the claddings during the production process. After unpacking the panels, remove the protective foil to prevent is permanent sticking to the protective varnish on claddings.

It is recommended that the panels and flashings are cut on stands covered with soft material, i.e. felt or polystyrene so as to avoid damage to colour layers.

Use a saw with fine blades to cut the panels, and manual scissors for flashings.

Using angle grinders and other tools generating high temperature while cutting is forbidden: it may lead to damage to anti-corrosion layers - fig. no. 5.

Fig. 5

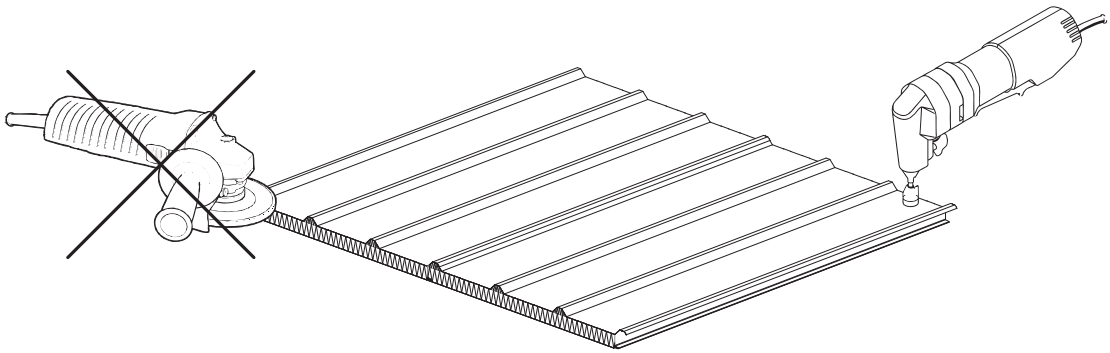

Use appropriate connectors to assemble the sandwich boards, depending on the type of bearing structure and panel core thicknesses. Types of fasteners and their specifications are given in the CONNECTORS chapter.

All connectors have washers with a vulcanised EPDM, which makes them usable for many years with the sealing element being flexible all the time.

Use appropriate electrical tools for screwing the connectors in. Drill-drivers should have appropriate heads for driving long connectors and depth limiter - fig. no. 6. This will guarantee correctness of the assembly, i.e. the connector`s perpendicular position to the panel will be maintained; the risk of damage to panel surface will be minimised and fastening will be tight - fig. no 7. Universal drill-drivers with regular, short heads are permissible. However, such tools should be equipped with a depth limiter for inserting connectors. Below are the optimum parameters of electrical tools for sandwich panel assembly:

- power 600 - 750 W
- speed 1500 - 2000 rev./min.
- torque 600 - 700 Ncm

Fig. 6

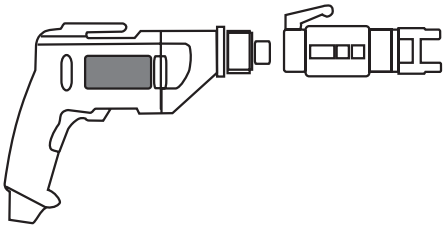

Fig. 7

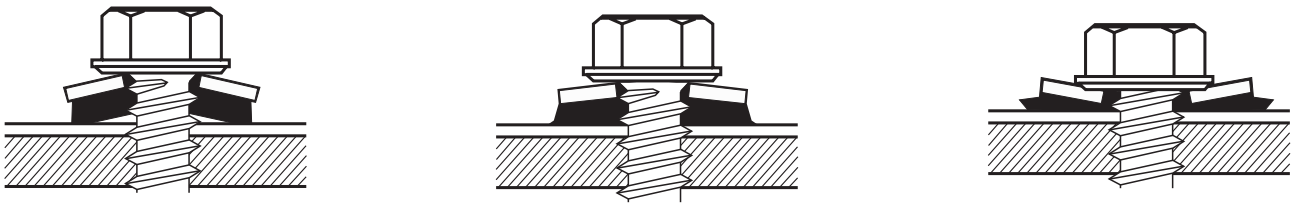

too weak (not tightened) **correct** **too tight (over-tightened)**

BALEXTHERM-MW-R panel – assembly example:

STAGE I - preparing the panel for assembly. Make sure that the neighbouring panel has been mounted correctly and if the recommended PES tape has been placed on the bearing structure

STAGE II - place the overlap on the hump and lift the panel edge by approximately 30cm (you may use polystyrene supports to stabilise the angle position of the roof panel)

STAGE III - push the stabilised panel in the connection place (as illustrated)

STAGE IV - lower the panel graduall

STAGE V - assemble the connectors to the bearing structure and make the longitudinal connection (by means of farmer`s screws or tight rivets)

Stage I

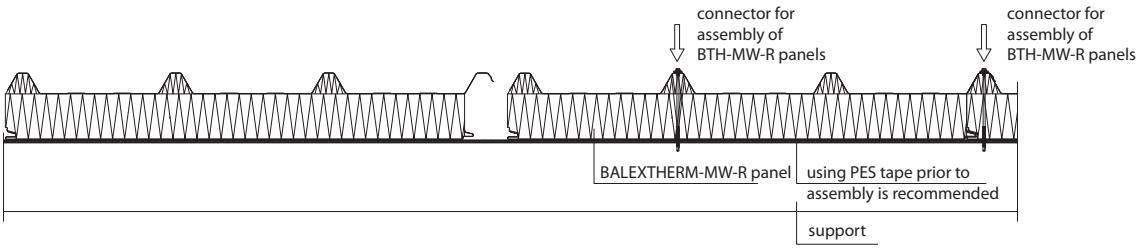

Stage II

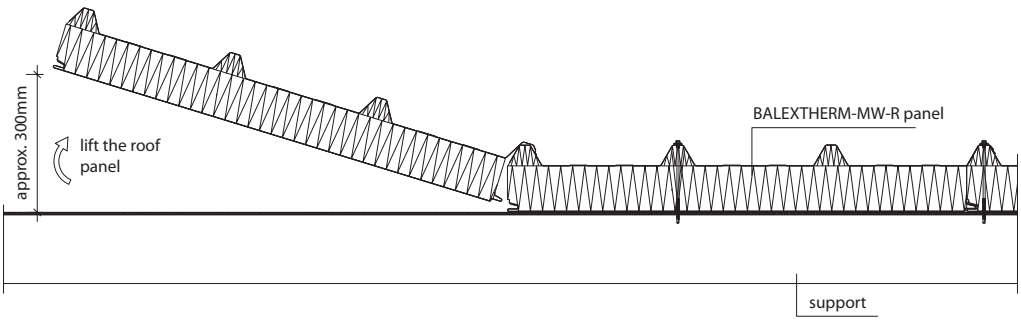

Stage III

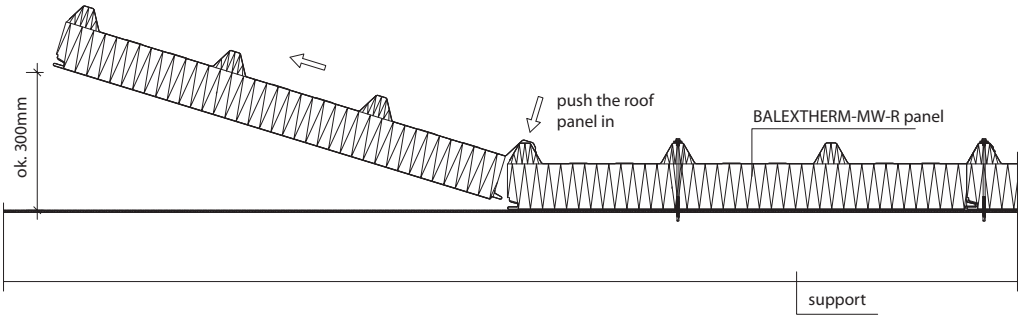

Stage IV

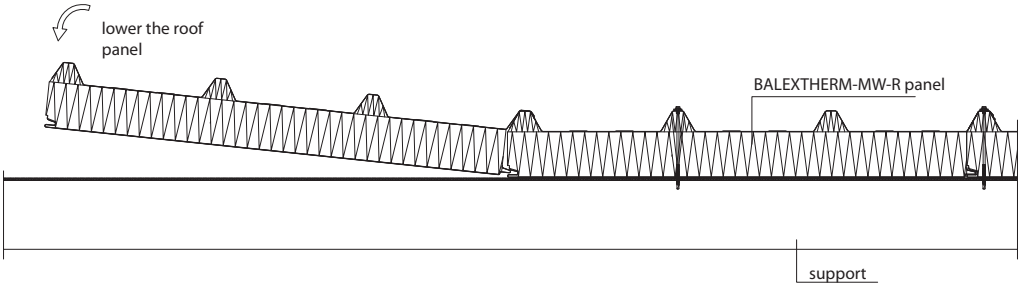

Stage V

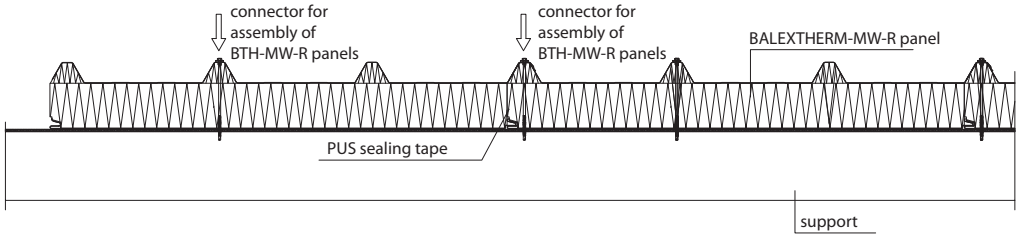

Fastening BALEXTHERM-MW-R panel to the roof.

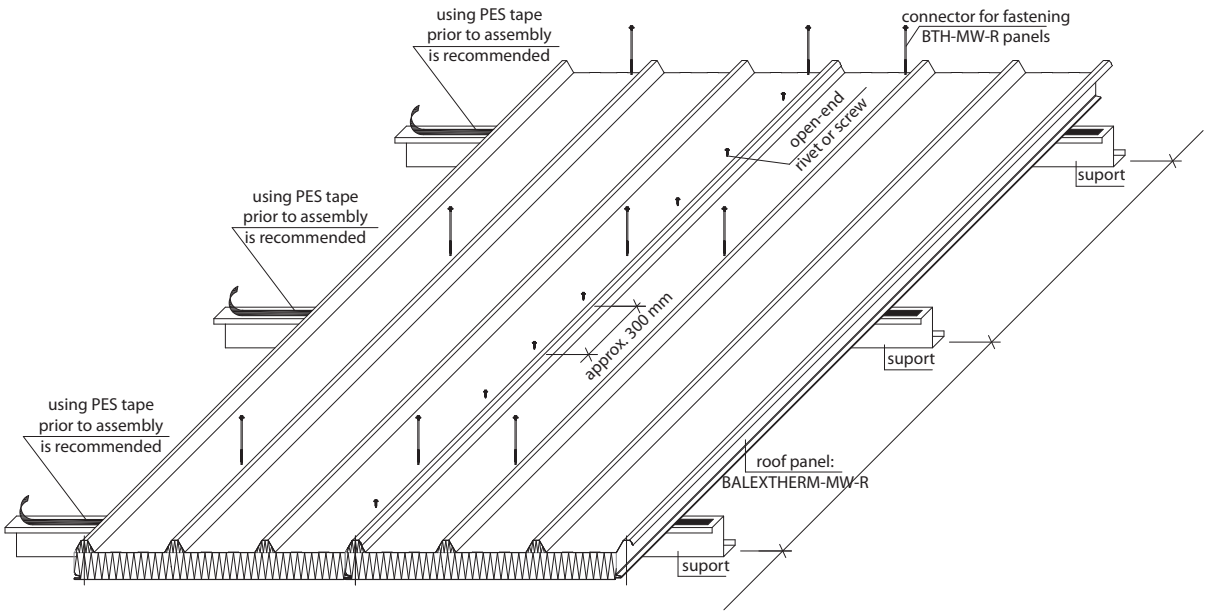

Note !
If assembled panels are longer than 8 m, the mounting team should consist of more than 2 people.

After cutting and drilling carefully remove all metal waste and fillings that may change the colour of the cladding. Tighten the whole housing by means of appropriate tapes and sealing foams. Secure all damaged varnish points on the cladding sheets by touch up paint.

20. GUIDELINES ON TRANSPORTATION

Recommended means of transport and their technical conditions:

The basic means of transport for sandwich panels are trucks with a trailer or semi-trailer, where long panels may be loaded (up to 13,60 m) on both sides of the vehicle.

The following technical conditions are recommended for vehicles transporting sandwich panels:
- deck trailer ("CURTAIN" type)
- trailer longer than transported panels (panel packages should lie flat)
- transport straps mounting the load should be located on the panel package on each support (strap tension must not cause panel deformation)

How to pack sandwich panels:
The number of sandwich panels in a package depends on the kind and thickness of single panels (Table 14).

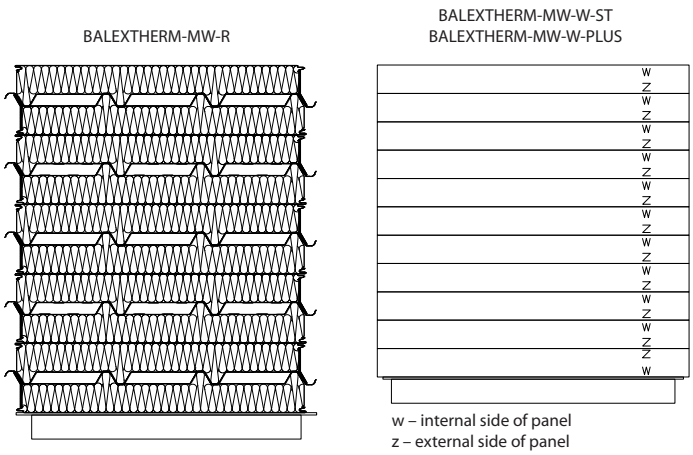

Table 33. How to pack BALEXTHERM-MW sandwich panels

TYPE	Panel kind	Panel thickness	Number of panels per package	Loading height of two packages
		[mm]	[pcs]	[mm]
1	2	3	4	5
wall	BTH-MW-W	80	14	2426
	BTH-MW-W	100	11	2386
	BTH-MW-W	120	9	2346
	BTH-MW-W	150	7	2286
	BTH-MW-W	160	7	2426
	BTH-MW-W	180	6	2346
	BTH-MW-W	200	6	2586
	BTH-MW-W	240	5	2536
	BTH-MW-R	100 / 145	8	2146
	BTH-MW-R	120 / 165	8	2466
roof	BTH-MW-R	150 / 195	6	2256
	BTH-MW-R	160 / 205	6	2376
	BTH-MW-R	150 / 195	6	2256
	BTH-MW-R	160 / 205	6	2376

Example

An example load: BALEXTHERM-MW-W-ST 100.1100 wall panels; length: 12 m number: 36 pieces (475,2 m^2).
The number of packages for the whole load is:
number of panels/number of panels of a given thickness in the package = 36/11= 3 packages x 11 pcs. and 1 package 3 pcs. The total load weight is: total panel surface x weight of 1 m^2 = 475,2 x 19,80 ≈ 9410 kg

Transportation requirements for the load:

Min. trailer length 12,5 m; Min. loading capacity 6,5 t

The load will be arranged in two stacks, two panel packages in each.

Unloading, handling:

Proceed with great care during loading and unloading operations due to panel weight. Avoid point supports, as this may damage the cladding of the lowermost panel. To prevent this problem, distribute the weight on a larger surface. Make sure you do not drag one panel on the other ones, as this may result in scratching.

When lifting heavy packages, pay attention to proper support of the panels.

Table 34. How to support panels at unloading

Length [m]	Number of supports	„Fork" support span
L≤8	2	1,50
L>8	4	1,50

Storing panels:

Sandwich panels must be placed on joists, at least 250 mm above ground level. Maximum two packages may be placed one on the other. Storing in closed, airy spaces is recommended, at normal temperatures, away from fertilisers, acids, lye, salts and other corrosive substances. Storing uncovered panels is not allowed. In the case of short term storage under a tarpaulin (max. two weeks), free airflow must be provided. If the storage period is longer than two weeks, the panels must be placed in an appropriately ventilated place and left uncovered, with free access of air to all layers.

Failure to comply with the guidelines above may cause decolouring of claddings, the so-called „white rust", permanent damage to the core and also loss of warranty rights.

Small repairs and maintenance:

All damage to the claddings done in transportation or assembly should be corrected with touch-up paint. Maintenance of sandwich panels consists in regular inspections and securing any possible damage. Inspections should pay attention to uncovered edges and connections.

Notes on use:

Wall sandwich panels with dark colour claddings have high heat absorption properties, which may cause local deformations on cladding surfaces due to long exposure to sunlight (in particular in the summer period). This is why thermal movement of panels must be allowed, and panels of limited length should be used. This effects does not influence the use properties of sandwich panels; however, the producer reserves that the client buys sandwich panels in these colours at his/her own risk and has no right to claim against the producer for this reason. In roof panels there are practically no local surface deformations. It is assumed that sheets in dark colours heat up to the temperature of 90 degrees C.

Thus Balex Metal shall not be held responsible for any possible damage due to high temperatures, the effect of which may be local loss of cladding stability. Dark colours are defined in point E.33 by EN14509 standard.

21. CERTIFICATION DOCUMENTS

CE

BALEXMETAL
BUDUJEMY RAZEM
WE BUILD TOGETHER

DEKLARACJA WŁAŚCIWOŚCI UŻYTKOWYCH

Nr MW-W-ST/2020/1

str. 1/2

1. **Niepowtarzalny kod identyfikacyjny typu wyrobu:** Płyta ścienna MW STANDARD (MW-W-ST)
2. **Zamierzone zastosowanie lub zastosowania:** Samonośne płyty warstwowe z rdzeniem z wełny mineralnej stosowane jako ściany zewnętrzne, wewnętrzne i sufity
3. **Producent: BALEX METAL sp. z o.o.,** ul. Wejherowska 12C, 84-239 Bolszewo
4. **System(-y) oceny i weryfikacji stałości właściwości użytkowych:** 3
5. **Norma zharmonizowana:** PN-EN 14509:2013
6. **Jednostka lub jednostki notyfikowane:** Instytut Techniki Budowlanej (nr 1488), FIRES, s.r.o (nr 1396)
7. **Deklarowane właściwości użytkowe:** Tablica 1

Tablica 1: Właściwości użytkowe

Zasadnicze charakterystyki				Właściwości użytkowe							
Gatunek stali				S250 - 280GD, 1.4301							
Rodzaje Powłok				SP, HDP, PVDF, PVC(P), PVC(F), PUR							
Grubość okładzin	Zewnętrzna [mm]			0,5; 0,6; 0,7							
	Wewnętrzna [mm]			0,5; 0,6; 0,7							
Rodzaje profilowań	Zewnętrzna			M (mikroprofilowane), L (Liniowanie), R (Rowkowanie), G (Gładkie), C (Clearline)							
	Wewnętrzna			L (Liniowanie), G (Gładkie), C (Clearline)							
Materiał rdzenia				Wełna mineralna							
Nominalna gęstość rdzenia [kg/m³]				110							
Nominalna grubość d_N [mm]				80	100	120	150	160	180	200	240
Masa płyty [kg/m²]				17.7	19.8	21.9	25.01	26.1	28.2	30.3	34.5
Wytrzymałość mechaniczna	Wytrzymałość na ściskanie f_{cc} [MPa]			0,100	0,100	0,100	0,100	0,100	0,100	0,092	0,092
	Wytrzymałość na rozciąganie f_{ct} [MPa]			0,100	0,100	0,100	0,100	0,100	0,100	0,100	0,100
	Wytrzymałość na ścinanie f_{cv} [MPa]			0,062	0,062	0,062	0,062	0,062	0,062	0,062	0,062
	Moduł sprężystości poprz. G_c[MPa]			3,2	3,2	3,5	3,5	3,5	3,5	3,5	3,5
	Naprężenia marszczące	W przęśle	pow. Zewn [MPa]	M	146	142	139	134	129	120	112	94
				L	122	124	127	130	130	130	130	101
				G, R, C	106	103	101	96	96	95	95	93
			pow. zewn. podwyższ. temp. [MPa]	M	146	142	139	134	129	120	112	94
				L	122	124	127	130	130	130	130	101
				G, R, C	106	103	101	96	96	95	95	93
			pow. wewn. [MPa]	L	159	150	141	128	125	118	112	98
				G, C	119	115	111	106	105	103	102	98
		Nad podporą	pow. zewn. [MPa]	M	144	136	128	116	113	108	103	93
				L	100	104	108	114	112	107	103	93
				G, R, C	105	100	96	89	88	86	84	80
			pow. zewn. podwyższ. temp. [MPa]	M	144	136	128	116	113	108	103	93
				L	100	104	108	114	112	107	103	93
				G, R, C	105	100	96	89	88	86	84	80
			pow. wewn [MPa]	L	131	128	124	120	117	113	108	98
				G, C	116	110	103	94	95	98	101	98
		Wsp. kor.	Gr. okładz.	0,6mm	0,88 (mikroprofilowanie); 0,89 (liniowanie); 1 (Rowkowanie, Gładkie, Clearline)							
				0,7mm	0,80 (mikroprofilowanie); 0,80 (liniowanie); 1 (Rowkowanie, Gładkie, Clearline)							

BALEX METAL Sp. z o.o., CENTRALA 84-239 Bolszewo, ul. Wejherowska 12C, tel. +48 58 778 44 44, fax: +48 58 778 44 55
e-mail: kontakt@balex.eu www.balex.eu www.thermano.eu NIP PL 5881130299, KRS 0000176277, REGON 191112216

CE

BALEXMETAL
BUDUJEMY RAZEM
WE BUILD TOGETHER

DEKLARACJA WŁAŚCIWOŚCI UŻYTKOWYCH

Nr MW-W-ST/2020/1

str. 2/2

Tablica 1: Właściwości użytkowe

Nominalna grubość d_N [mm]		80	100	120	150	160	180	200	240
Przenikalność cieplna	Wsp. przenikania ciepła $U_{c,c}$ [W/ m²K]	0,47	0,38	0,32	0,26	0,24	0,22	0,19	0,17
	Wsp. przewodzenia ciepła λ_D [W/mK]	0,040							
Reakcja na ogień	Klasyfikacja reakcji na ogień	A2-s1,d0							
Odporność ogniowa	Klasyfikacja odporności ogniowej ścian		EI 120		EI 240				
Przepuszczalność wody	Klasyfikacja odporności	A							
Przepuszczalność powietrza	Ilość przenikającego powietrza [m³/(m²·h)]	0 (Nieprzepuszczalne)							
Przepuszczalność pary wodnej	Współczynnik przenikania pary wodnej μ	∞ (Nieprzepuszczalne)							
Izolacyjność akustyczna	Wskaźniki jednoliczbowe R_w, R_{A1}, R_{A2} [dB]	R_w≥32, R_{A1}≥29, R_{A2}≥28; R_w≥33, R_{A1}≥31, R_{A2}≥29(160)							
Pochłanianie dźwięku	Współczynnik pochłaniania dźwięku α_w	NPD							
Trwałość	Kryteria trwałości DUR2	Spełnia							
Niebezpieczne substancje	Uwalnianie niebezpiecznych substancji	NPD							

Właściwości użytkowe określonego powyżej wyrobu są zgodne z zestawem deklarowanych właściwości użytkowych. Niniejsza deklaracja właściwości użytkowych wydana zostaje zgodnie z rozporządzeniem (UE) nr 305/2011 na wyłączną odpowiedzialność producenta określonego powyżej.

W imieniu producenta podpisał:
Kierownik Procesu Certyfikacji

BALEXMETAL Sp. z o.o.
84-239 Bolszewo, ul. Wejherowska 12C
tel. 58 778-44-44, fax 58 778-44-55
NIP 588-11-30-299
P-191112216

Wawrzynowicz

Bolszewo, 27 października 2020

dr inż. Adam Wawrzynowicz

BALEX METAL Sp. z o.o., CENTRALA 84-239 Bolszewo, ul. Wejherowska 12C, tel. +48 58 778 44 44, fax: +48 58 778 44 55
e-mail: kontakt@balex.eu www.balex.eu www.thermano.eu NIP PL 5881130299, KRS 0000176277, REGON 191112216

BALEXMETAL
BUDUJEMY RAZEM
WE BUILD TOGETHER

DEKLARACJA WŁAŚCIWOŚCI UŻYTKOWYCH

Nr MW-LT-W-ST/2020/1

1. **Niepowtarzalny kod identyfikacyjny typu wyrobu:** Płyta ścienna MW LIGHT (MW-LT-W-ST)
2. **Zamierzone zastosowanie lub zastosowania:** Samonośne płyty warstwowe z rdzeniem z wełny mineralnej stosowane jako ściany zewnętrzne, wewnętrzne i sufity
3. **Producent: BALEX METAL sp. z o.o.,** ul. Wejherowska 12C 84-239 Bolszewo
4. **System(-y) oceny i weryfikacji stałości właściwości użytkowych:** 3
5. **Norma zharmonizowana:** PN-EN 14509:2013
6. **Jednostka lub jednostki notyfikowane:** Instytut Techniki Budowlanej (nr 1488), FIRES, s.r.o (nr 1396)
7. **Deklarowane właściwości użytkowe:** Tablica 1

Tablica 1: Właściwości użytkowe

Zasadnicze charakterystyki				Właściwości użytkowe							
Gatunek stali				S250 - 280GD, 1.4301							
Rodzaje Powłok				SP, HDP, PVDF, PVC(P), PVC(F), PUR							
Grubość okładzin	Zewnętrzna [mm]			0,5; 0,6; 0,7							
	Wewnętrzna [mm]			0,5; 0,6; 0,7							
Rodzaje profilowań	Zewnętrzna			M (Mikroprofilowanie), L (Liniowanie), R (Rowkowanie), G (Gładkie), C (Clearline)							
	Wewnętrzna			L (Liniowanie), G (Gładkie), C (Clearline)							
Materiał rdzenia				Wełna mineralna							
Nominalna gęstość rdzenia [kg/m³]				90							
Nominalna grubość d_N [mm]				80	100	120	150	160	180	200	240
Masa płyty [kg/m²]				14,5	16,2	17,9	20,5	21,4	23,1	24,8	28,2
Wytrzymałość mechaniczna	Wytrzymałość na ściskanie f_{cc} [MPa]			0,065	0,065	0,065	0,065	0,060	0,060	0,060	0,060
	Wytrzymałość na rozciąganie f_{ct} [MPa]			0,080	0,080	0,080	0,080	0,070	0,070	0,070	0,070
	Wytrzymałość na ścinanie f_{cv} [MPa]			0,045	0,045	0,045	0,045	0,045	0,045	0,045	0,045
	Moduł sprężystości poprz. G_c[MPa]			2,5	2,5	2,5	2,5	2,5	2,5	2,5	2,5
	Naprężenia marszczące	W prasie	pow. Zewn [MPa]	M	121	119	117	115	111	103	95	79
				L	119	113	107	99	98	96	94	87
				G, R, C	115	110	105	98	96	93	91	85
			pow. zewn. podwyższ. temp. [MPa]	M	121	119	117	115	111	103	95	79
				L	119	113	107	99	98	96	94	87
				G, R, C	115	110	105	98	96	93	91	85
			pow. wewn. [MPa]	L	120	117	114	110	106	99	92	77
				G, C	116	111	107	101	97	90	84	70
		Nad podporą	pow. zewn. [MPa]	M	120	116	113	109	106	100	95	79
				L	85	85	85	85	83	81	79	74
				G, R, C	80	78	76	74	74	74	75	75
			pow. zewn. podwyższ. temp. [MPa]	M	120	116	113	109	106	100	95	79
				L	85	85	85	85	83	81	79	74
				G, R, C	80	78	76	74	74	74	75	75
			pow. wewn [MPa]	L	106	106	107	108	104	97	91	77
				G, C	102	100	99	97	94	88	83	70
		Wsp. kor.	Gr. okładz.	0,6mm	0,88 (Mikroprofilowanie); 0,89 (Liniowanie); 1 (Rowkowanie, Gładkie, Clearline)							
				0,7mm	0,80 (Mikroprofilowanie); 0,80 (Liniowanie); 1 (Rowkowanie, Gładkie, Clearline)							

BALEXMETAL
BUDUJEMY RAZEM
WE BUILD TOGETHER

DEKLARACJA WŁAŚCIWOŚCI UŻYTKOWYCH

Nr MW-LT-W-ST/2020/1

Tablica 1: Właściwości użytkowe

Nominalna grubość d_N [mm]		80	100	120	150	160	180	200	240
Przenikalność cieplna	Wsp. przenikania ciepła $U_{d,t}$ [W/ m²K]	0,47	0,38	0,32	0,26	0,24	0,22	0,19	0,17
	Wsp. przewodzenia ciepła λ_D [W/mK]	0,040							
Reakcja na ogień	Klasyfikacja reakcji na ogień	A2-s1,d0							
Odporność ogniowa	Klasyfikacja odporności ogniowej ścian		EI 90/EW 120		EI 180			EI 240/EW 120	
Przepuszczalność wody	Klasyfikacja odporności	A							
Przepuszczalność powietrza	Ilość przenikającego powietrza [m³/(m²h)]	0 (Nieprzepuszczalne)							
Przepuszczalność pary wodnej	Współczynnik przenikania pary wodnej μ	∞ (Nieprzepuszczalne)							
Izolacyjność akustyczna	Wskaźniki jednoliczbowe R_w, R_{A1}, R_{A2} [dB]	R_w≥32, R_{A1}≥29, R_{A2}≥28							
Pochłanianie dźwięku	Współczynnik pochłaniania dźwięku α_w	NPD							
Trwałość	Kryteria trwałości DUR2	Spełnia							
Niebezpieczne substancje	Uwalnianie niebezpiecznych substancji	NPD							

Właściwości użytkowe określonego powyżej wyrobu są zgodne z zestawem deklarowanych właściwości użytkowych. Niniejsza deklaracja właściwości użytkowych wydana zostaje zgodnie z rozporządzeniem (UE) nr 305/2011 na wyłączną odpowiedzialność producenta określonego powyżej

BALEXMETAL Sp. z o.o.
84-239 Bolszewo, ul. Wejherowska 12C
tel. 58 778-44-44, fax 58 778-44-55
NIP 588-11-30-299
P-191112216

Bolszewo, 27 października 2020

W imieniu producenta podpisał:
Kierownik Procesu Certyfikacji

dr inż. Adam Wawrzynowicz

BALEX METAL Sp. z o.o., CENTRALA 84-239 Bolszewo, ul. Wejherowska 12C, tel. +48 58 778 44 44, fax: +48 58 778 44 55
e-mail: kontakt@balex.eu www.balex.eu www.thermano.eu NIP PL 5881130299, KRS 0000176277, REGON 191112216

BALEXMETAL
BUDUJEMY RAZEM
WE BUILD TOGETHER

DEKLARACJA WŁAŚCIWOŚCI UŻYTKOWYCH

Nr MW-W-PLUS/2020/1

1. **Niepowtarzalny kod identyfikacyjny typu wyrobu:** Płyta ścienna MW PLUS (MW-W-PLUS)
2. **Zamierzone zastosowanie lub zastosowania:** Samonośne płyty warstwowe z rdzeniem z wełny mineralnej stosowane jako ściany zewnętrzne, wewnętrzne i sufity
3. **Producent: BALEX METAL sp. z o.o.,** ul. Wejherowska 12C, 84-239 Bolszewo
4. **System(-y) oceny i weryfikacji stałości właściwości użytkowych:** 3
5. **Norma zharmonizowana:** PN-EN 14509:2013
6. **Jednostka lub jednostki notyfikowane:** Instytut Techniki Budowlanej (nr 1488), FIRES, s.r.o (nr 1396)
7. **Deklarowane właściwości użytkowe:** Tablica 1

Tablica 1: Właściwości użytkowe

Zasadnicze charakterystyki				Właściwości użytkowe						
Gatunek stali				S250 - 280GD, 1.4301						
Rodzaje Powłok				SP, HDP, PVDF, PVC(P), PVC(F), PUR						
Grubość okładzin	Zewnętrzna [mm]			0,5; 0,6; 0,7						
	Wewnętrzna [mm]			0,5; 0,6; 0,7						
Rodzaje profilowań	Zewnętrzna			M (Mikroprofilowanie), L (Liniowanie), R (Rowkowanie), G (Gładkie), C (Clearline)						
	Wewnętrzna			L (Liniowanie), G (Gładkie), C (Clearline)						
Materiał rdzenia				Wełna mineralna						
Nominalna gęstość rdzenia [kg/m³]				110						
Nominalna grubość d_N [mm]				80	100	120	150	160	180	200
Masa płyty [kg/m²]				17.7	19.8	21.9	25.01	26.1	28.2	30.3
Wytrzymałość mechaniczna	Wytrzymałość na ściskanie f_{cc} [MPa]			0,100	0,100	0,100	0,100	0,100	0,100	0,092
	Wytrzymałość na rozciąganie f_{ct} [MPa]			0,100	0,100	0,100	0,100	0,100	0,100	0,100
	Wytrzymałość na ścinanie f_{cv} [MPa]			0,062	0,062	0,062	0,062	0,062	0,062	0,062
	Moduł sprężystości poprz. G_c[MPa]			3,2	3,2	3,5	3,5	3,5	3,5	3,5
	Naprężenia marszczące	W prasie	pow. Zewn [MPa]	M	146	142	139	134	129	120	112
				L	122	124	127	130	130	130	130
				G, R, C	106	103	101	96	96	95	95
			pow. zewn. podwyższ. temp. [MPa]	M	146	142	139	134	129	120	112
				L	122	124	127	130	130	130	130
				G, C	106	103	101	96	96	95	95
			pow. wewn. [MPa]	L	159	150	141	128	125	118	112
				G, R, C	119	115	111	106	105	103	102
		Nad podporą	pow. zewn. [MPa]	M	144	136	128	116	113	108	103
				L	100	104	108	114	112	107	103
				G, R, C	105	100	96	89	88	86	84
			pow. zewn. podwyższ. temp. [MPa]	M	144	136	128	116	113	108	103
				L	100	104	108	114	112	107	103
				G, R, C	105	100	96	89	88	86	84
			pow. wewn [MPa]	L	131	128	124	120	117	113	108
				G, C	116	110	103	94	95	98	101
		Wsp. kor.	Gr. okładz.	0,6mm	0,80 (mikroprofilowanie); 0,80 (liniowanie); 1 (Rowkowanie, Gładkie, Clearline)						
				0,7mm	0,88 (mikroprofilowanie); 0,89 (liniowanie); 1 (Rowkowanie, Gładkie, Clearline)						

BALEX METAL Sp. z o.o., CENTRALA 84-239 Bolszewo, ul. Wejherowska 12C, tel. +48 58 778 44 44, fax: +48 58 778 44 55
e-mail: kontakt@balex.eu www.balex.eu www.thermano.eu NIP PL 5881130299, KRS 0000176277, REGON 191112216

BALEXMETAL
BUDUJEMY RAZEM
WE BUILD TOGETHER

DEKLARACJA WŁAŚCIWOŚCI UŻYTKOWYCH

Nr MW-W-PLUS/2020/1

Tablica 1: Właściwości użytkowe

Nominalna grubość d_N [mm]		80	100	120	150	160	180	200
Przenikalność cieplna	Wsp. przenikania ciepła $U_{d,t}$ [W/ m²K]	0,48	0,38	0,32	0,26	0,24	0,22	0,20
	Wsp. przewodzenia ciepła λ_D [W/mK]	0,040						
Reakcja na ogień	Klasyfikacja reakcji na ogień	A2-s2,d0						
Odporność ogniowa ścian	Klasyfikacja odporności ogniowej ścian		EI 30	EI 60				
Przepuszczalność wody	Klasyfikacja odporności	A						
Przepuszczalność powietrza	Ilość przenikającego powietrza [m³/(m²h)]	0 (Nieprzepuszczalne)						
Przepuszczalność pary wodnej	Współczynnik przenikania pary wodnej μ	∞ (Nieprzepuszczalne)						
Izolacyjność akustyczna	Wskaźniki jednoliczbowe R_w, R_{A1}, R_{A2} [dB]	R_w≥32, R_{A1}≥29, R_{A2}≥28						
Pochłanianie dźwięku	Współczynnik pochłaniania dźwięku α_w	NPD						
Trwałość	Kryteria trwałości DUR2	Spełnia						
Niebezpieczne substancje	Uwalnianie niebezpiecznych substancji	NPD						

Właściwości użytkowe określonego powyżej wyrobu są zgodne z zestawem deklarowanych właściwości użytkowych. Niniejsza deklaracja właściwości użytkowych wydana zostaje zgodnie z rozporządzeniem (UE) nr 305/2011 na wyłączną odpowiedzialność producenta określonego powyżej.

BALEXMETAL Sp. z o.o.
84-239 Bolszewo, ul. Wejherowska 12C
tel. 58 778-44-44, fax 58 778-44-55
NIP 588-11-30-299
P-191112216

Bolszewo, 27 październik 2020

W imieniu producenta podpisał:
Kierownik Procesu Certyfikacji

dr inż. Adam Wawrzynowicz

BALEX METAL Sp. z o.o., CENTRALA 84-239 Bolszewo, ul. Wejherowska 12C, tel. +48 58 778 44 44, fax: +48 58 778 44 55
e-mail: kontakt@balex.eu www.balex.eu www.thermano.eu NIP PL 5881130299, KRS 0000176277, REGON 191112216

BALEXMETAL
BUDUJEMY RAZEM
WE BUILD TOGETHER

DEKLARACJA WŁAŚCIWOŚCI UŻYTKOWYCH
NR 13/2/14509

1	**Niepowtarzalny kod identyfikacyjny typu wyrobu**	Płyty warstwowe z rdzeniem z wełny mineralnej w dwustronnych okładzinach metalowych BALEXTHERM MW-R
2	**Typ, partia lub numer serii, lub inna informacja umożliwiająca identyfikacje wyrobu**	Dane identyfikujące partie wyrobu – zawarte na etykiecie każdej paczki wyrobu Grubość wyrobu[mm]: 100,120,150,160 Izolacja termiczna[kg/m^3]: MW, gęstość 110 -10/+15% Okładziny: Stal 0,5-0,7mm zewnętrzna; 0,5mm wewnętrzna Powłoki: SP, HDP, PVDF, PVC(P), PVC(F), PUR Gatunek stali: S250-280GD, 1.4301 Masa płyty[kg/m^2]: 20,3(100); 22,4(120); 25,6(150); 26,6(160) Profilowanie: zewnętrzne T, wewnętrzne L
3	**Zamierzone zastosowanie zgodnie ze zharmonizowaną specyfikacją techniczną**	Płyty warstwowe z rdzeniem z wełny mineralnej w dwustronnych okładzinach metalowych jako przekrycia i pokrycia dachowe
4	**Nazwa, adres kontaktowy producenta**	**BALEX METAL Sp. z o.o.** ul. Wejherowska 12 C, 84-239 Bolszewo
5	**System oceny i weryfikacji stałości właściwości użytkowych**	System 3
6	**Identyfikacja jednostek notyfikowanych**	Instytut Techniki Budowlanej ul. Filtrowa 1, 00-611 Warszawa Jednostka notyfikowana nr 1488

BALEX METAL Sp. z o.o., CENTRALA 84-239 Bolszewo, ul. Wejherowska 12C, tel. +48 58 778 44 44, fax: +48 58 778 44 55
e-mail: kontakt@balex.eu www.balex.eu www.thermano.eu NIP PL 5881130299, KRS 0000176277, REGON 191112216

NARODOWY INSTYTUT ZDROWIA PUBLICZNEGO
- PAŃSTWOWY ZAKŁAD HIGIENY

NATIONAL INSTITUTE OF PUBLIC HEALTH
- NATIONAL INSTITUTE OF HYGIENE

ZAKŁAD HIGIENY ŚRODOWISKA
DEPARTMENT OF ENVIRONMENTAL HYGIENE

24 Chocimska 00-791 Warsaw • Phone (22) 5421354; (22) 5421349 • Fax (22) 5421287 • e-mail: sek-zhk@pzh.gov.pl

ATEST HIGIENICZNY HK/B/0098/01/2014
HYGIENIC CERTIFICATE ORYGINAŁ

Wyrób / product: **Płyta warstwowa w okładzinach stalowych z rdzeniem z wełny mineralnej BALEXTHERM MW**

Zawierający / containing: wełnę mineralną, stal, powłoka: poliester/cynk/polifluorek winylidenu/polichlorek winylu

Przeznaczony do / destined: stosowania w budownictwie na ściany zewn. i wewn. obudowy konstrukcji obiektów: przemysł., spożywczych,produkcyjnych, sportowych,biurowych,handlowych,usługowych,administracyjnych, użyt. publicznej,służby zdrowia (z wyłączeniem sal operacyjnych,OIOM)

Wymieniony wyżej produkt odpowiada wymaganiom higienicznym przy spełnieniu następujących warunków / is acceptable according to hygienic criteria with the following conditions:

W przypadku stosowania w obiektach służby zdrowia wyrób musi spełniać wymagania rozporządzenia Ministra Zdrowia z dnia 26 czerwca 2012 (Dz. U. 2012:739 z 29 czerwca 2012) w sprawie szczegółowych wymagań, jakim powinny odpowiadać pomieszczenia i urządzenia podmiotu wykonującego działalność leczniczą.
Wełna mineralna wykorzystywana w w/w wyrobach nie może być źródłem przedostawania się jej włókien do powietrza pomieszczeń. W przypadku płyt z okładziną z polichlorku winylu zaleca się aby w pomieszczeniach przeznaczonych na stały pobyt ludzi pokrycie wyrobem nie przekraczało 50% wszystkich powierzchni budowlanych.

Wytwórca / producer:
BALEX METAL Sp. z o.o.
84-239 Bolszewo
ul. Wejherowska 12 C

Niniejszy dokument wydano na wniosek / this certificate issued for:
BALEX METAL Sp. z o.o.
84-239 Bolszewo
ul. Wejherowska 12 C

Atest może być zmieniony lub unieważniony po przedstawieniu stosownych dowodów przez którąkolwiek stronę. Niniejszy atest traci ważność po 2019-02-21 lub w przypadku zmian w recepturze albo w technologii wytwarzania wyrobu.

The certificate may be corrected or cancelled after appropriate motivation. The certificate loses its validity after 2019-02-21 or in the case of changes in composition or in technology of production.

Data wydania atestu higienicznego: 21 lutego 2014
The date of issue of the certificate: 21st February 2014

Kierownik Zakładu Higieny Środowiska
z up. Gawlowska
dr Bożena Krogulska

pro. T. Fedosiuk

www.pzh.gov.pl

II. DETAILED SOLUTIONS FOR ENCLOSURE MADE OF BALEXTHERM-MW-W-ST, BALEXTHERM-MW-D-W-ST, BALEXTHERM-MW-LT-W-ST, BALEXTHERM-MW-W-PLUS and BALEXTHERM-MW-R SANDWICH PANELS WITH MINERAL WOOL CORE

1. BALEXTHERM-MW-W-ST, BALEXTHERM-MW-D-W-ST, BALEXTHERM-MW-LT-W-ST WALL PANELS

1.1. MW-W-ST01
BALEXTHERM-MW-W-ST wall panel, joint, profile types

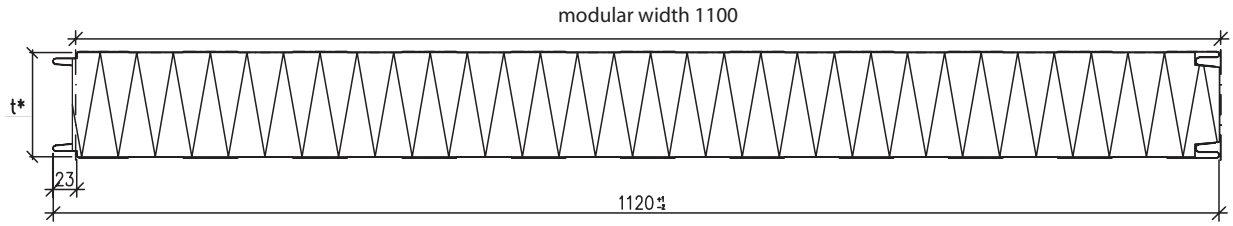

***Panel thickness range**
t = 80; 100; 120; 130; 140; 150; 160; 180; 200; 230 [mm]

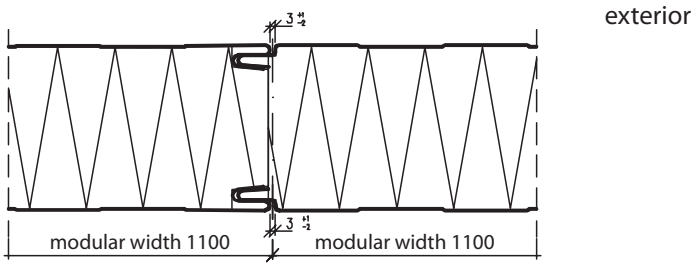

EXTERNAL CLADDINGS:

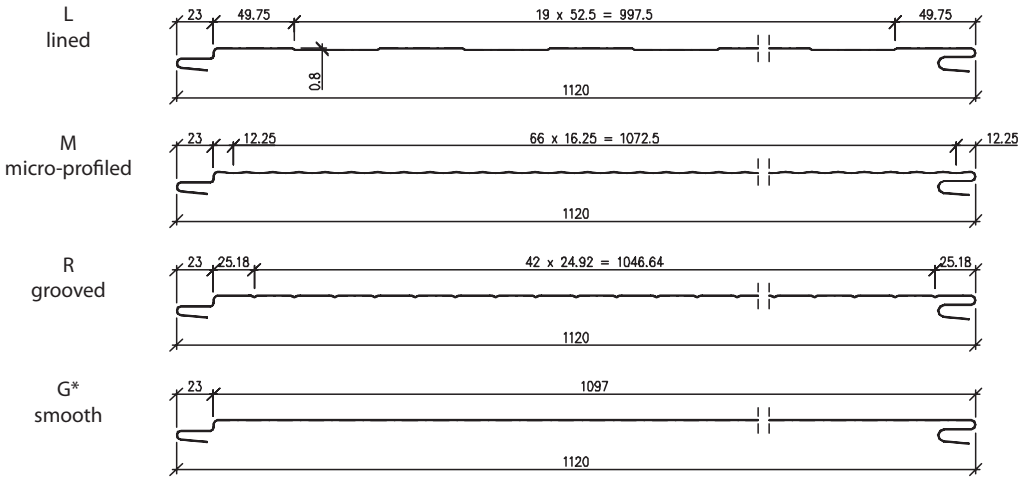

INTERNAL CLADDINGS:

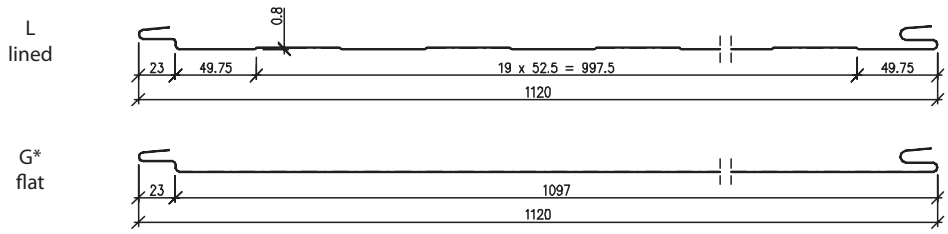

* flat for claddings thicker than 0,50 mm

1.2. MW-W-ST02
Panel fastening - vertical arrangement of panels

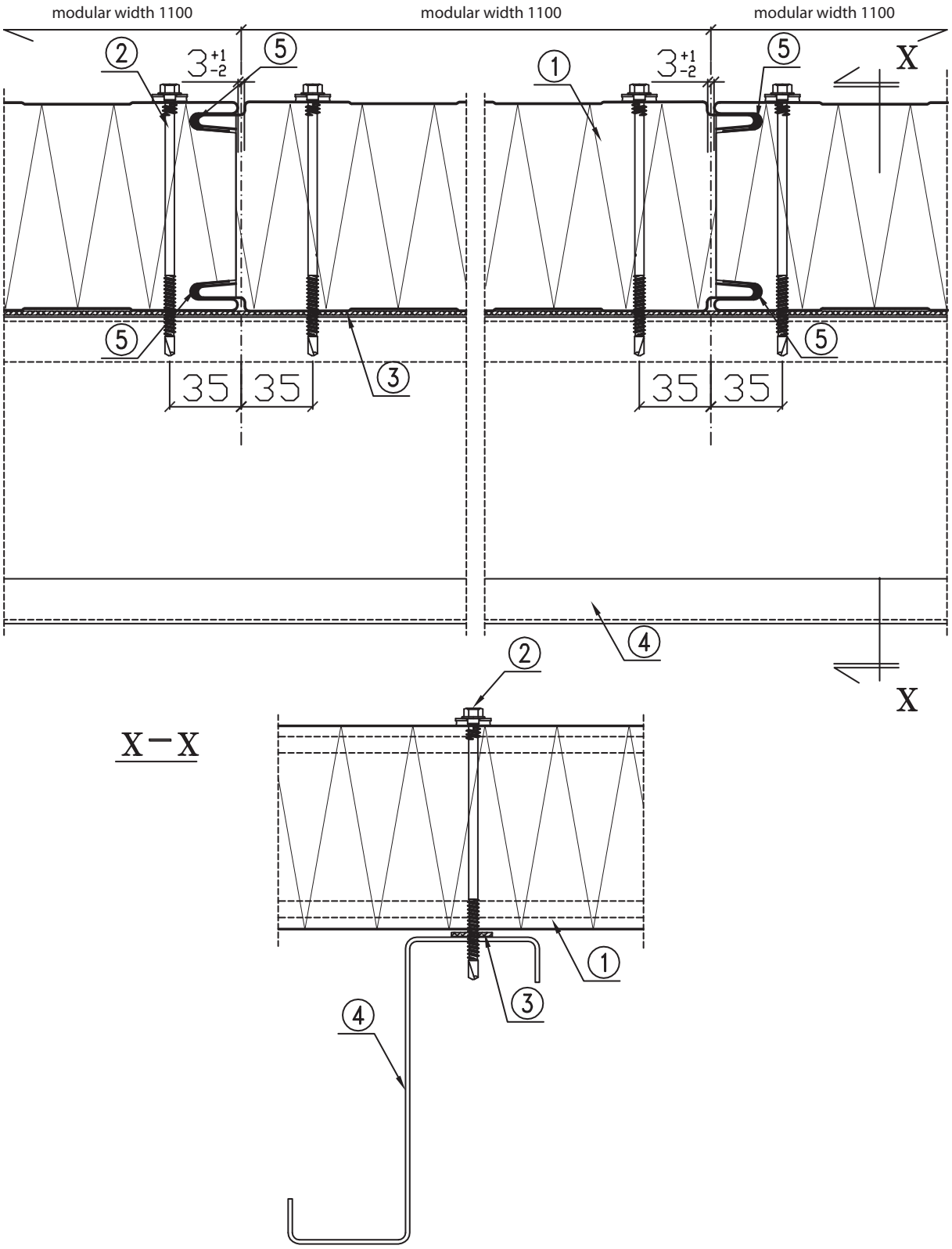

1. BALEXTHERM-MW-W-ST, BALEXTHERM-MW-D-W-ST, BALEXTHERM-MW-LT-W-ST wall panel
2. Self-drilling connector for fastening BALEXTHERM panels
3. PES 3x20 adhesive sealing tape (recommended)
4. Steel bolt: cold-bent, hot-rolled, wooden etc. acc. to the construction design
5. Sealing (butyl sealing is recommended)

1.3. MW-W-ST03
Basing panels on a ground beam or foundation
- vertical arrangement of panels

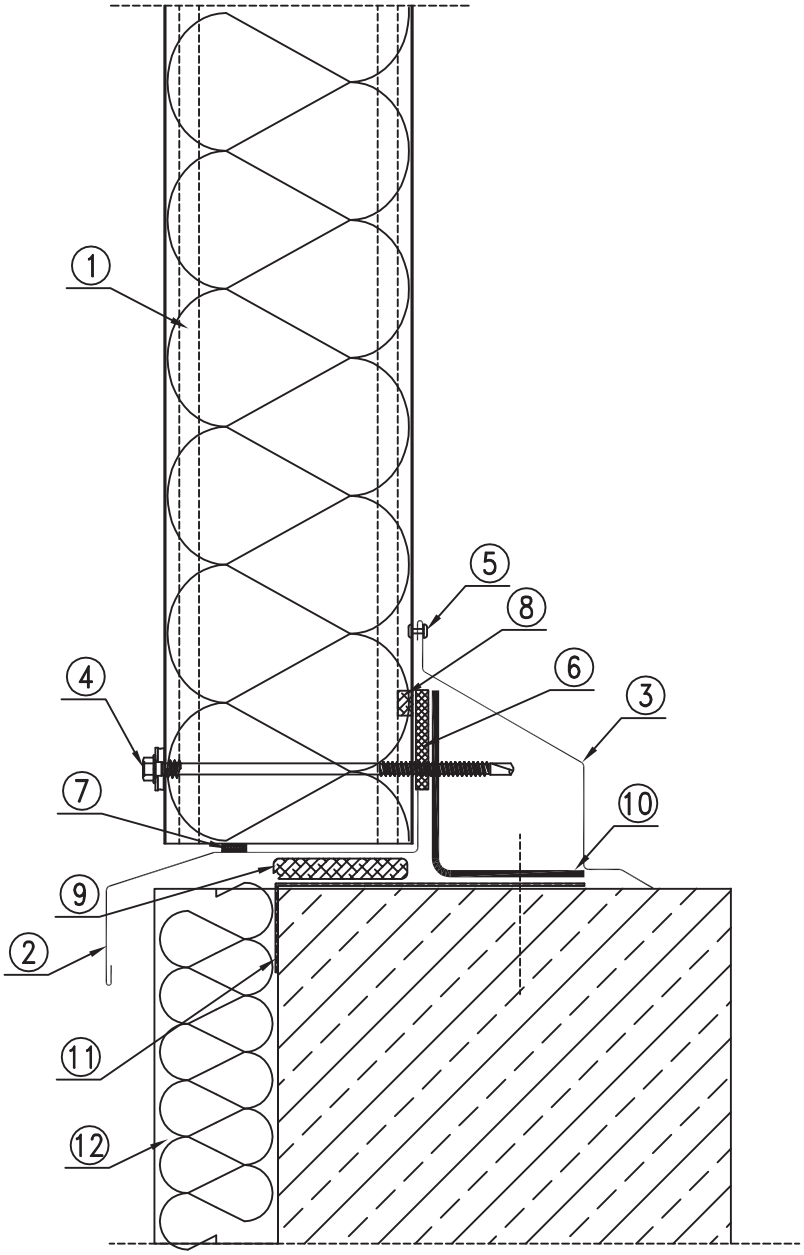

1. BALEXTHERM-MW-W-ST, BALEXTHERM-MW-D-W-ST, BALEXTHERM-MW-LT-W-ST wall panel
2. OBR100 or individual flashing
3. OBR101 or individual flashing
4. BALEXTHERM panel fastener: LB1 or LB2
5. Self-drilling connector LB6 or blind rivet AL/Fe, approx. every 300 mm
6. PUS 5x40 adhesive sealing tape or equivalent
7. Butyl sealing tape (recommended)
8. Sealing mass in the panel joint
9. Impregnated polyurethane gasket, thickness 20 mm or equivalent
10. Connection angle acc. to the construction design
11. Damp-proof insulation acc. to the architectural design
12. Thermal insulation of ground beam + plastering acc. to the architectural design

1.4. MW-W-ST04
Supporting panels below the upper level of the ground beam or foundation - vertical arrangement of panels

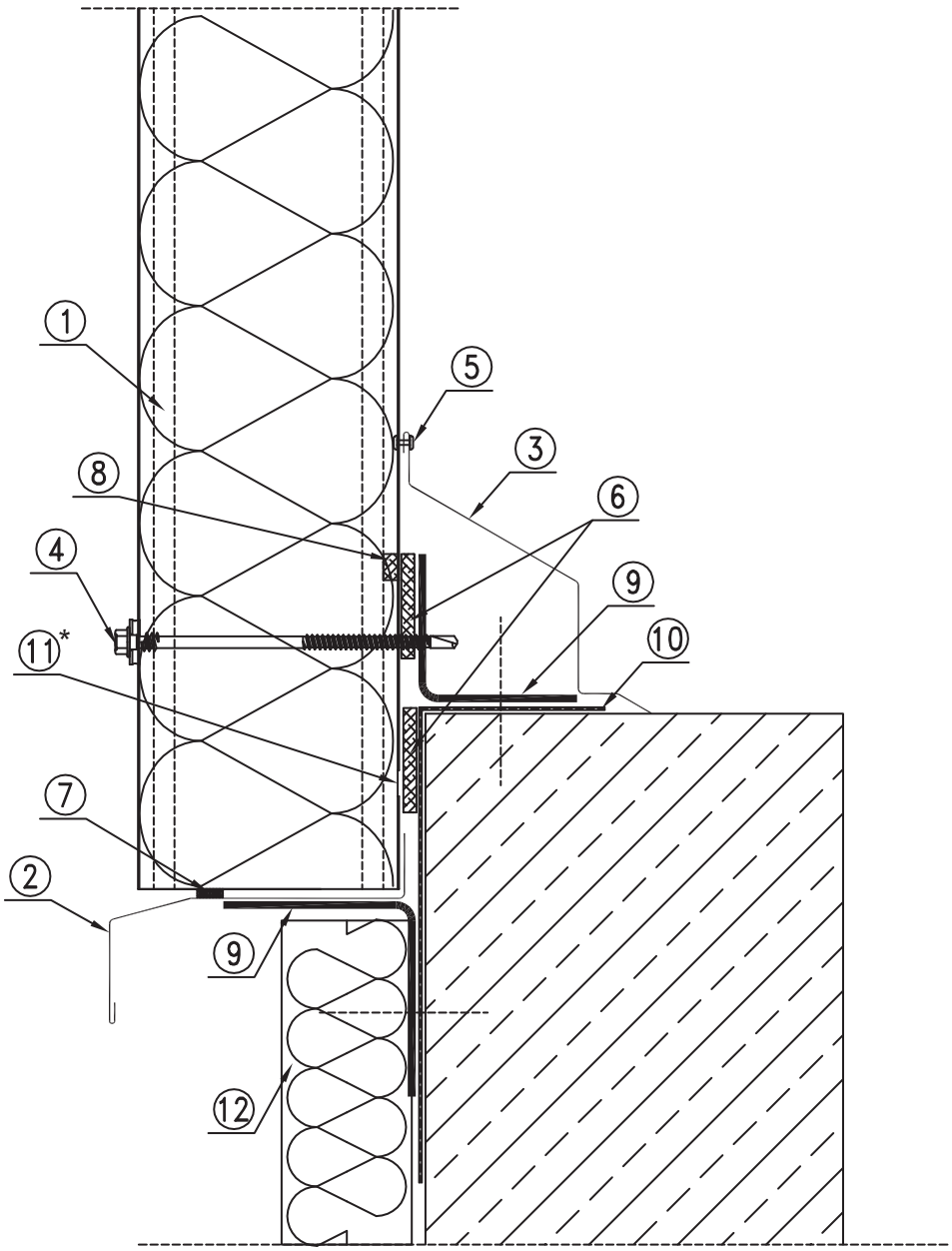

1. BALEXTHERM-MW-W-ST, BALEXTHERM-MW-D-W-ST, BALEXTHERM-MW-LT-W-ST wall panel
2. OBR 100 or individual flashing
3. OBR 101 or individual flashing
4. BALEXTHERM panel fastener: LB1 or LB2
5. Self-drilling connector LB6 or blind rivet AL/Fe, approx. every 300 mm
6. PUS 5x40 adhesive sealing tape or equivalent
7. Butyl sealing tape (recommended)
8. Sealing mass in the panel joint
9. Connection angle acc. to the construction design
10. Damp-proof insulation acc. to the architectural design
11. Cladding with a 10mm wide gap (throat distance of the support max 300mm)
12. Thermal insulation of ground beam + plaster acc. to the architectural design

* recommended for improving thermal insulation properties

1.5. MW-W-ST05
Basing panels on a ground beam or foundation - horizontal arrangement of panels

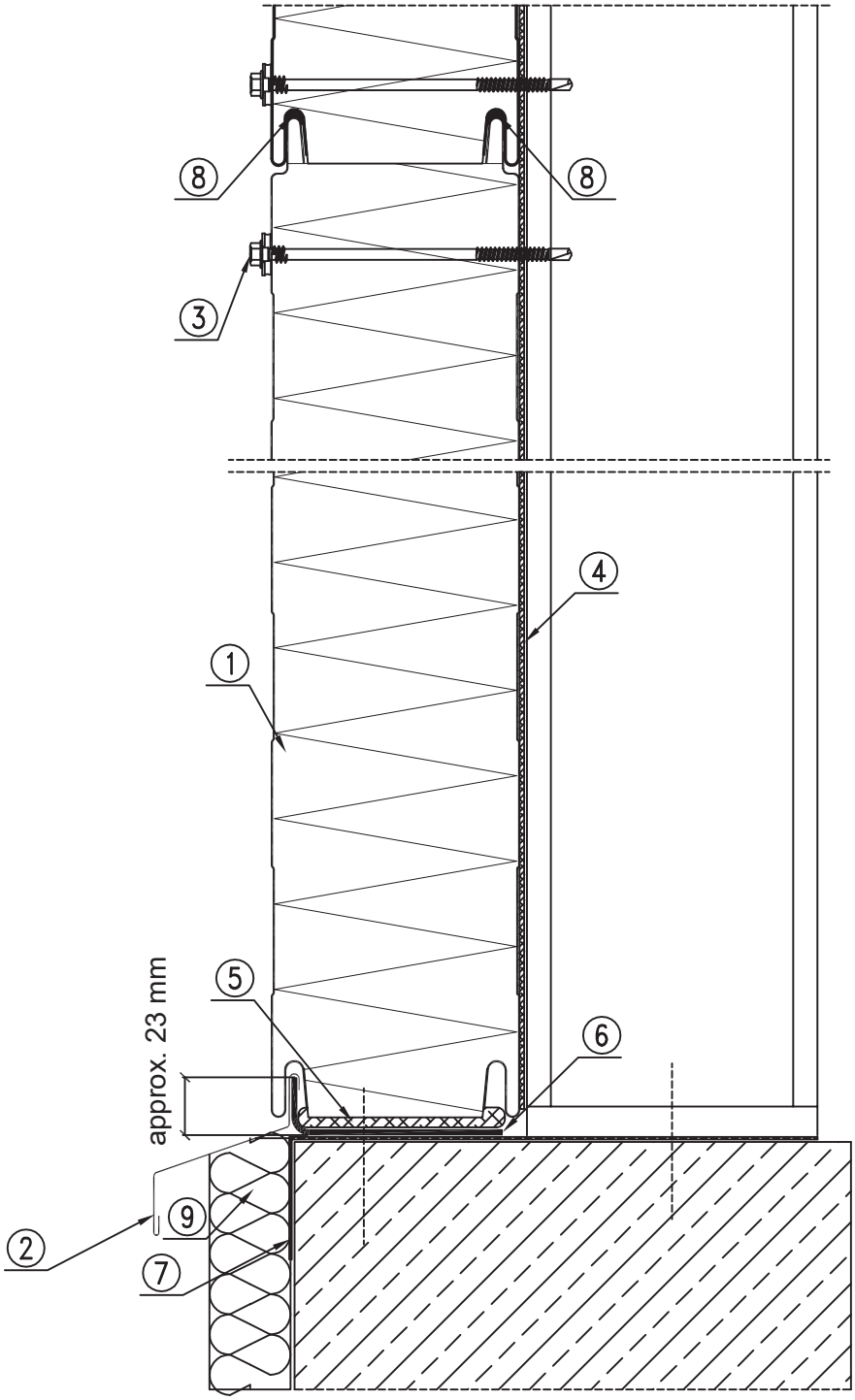

1. BALEXTHERM-MW-W-ST, BALEXTHERM-MW-D-W-ST, BALEXTHERM-MW-LT-W-ST wall panel
2. Individual flashing
3. BALEXTHERM panel fastener: LB1 - LB5
4. PES 3x20 adhesive sealing tape (recommended)
5. Impregnated polyurethane gasket; thickness: 20mm or equivalent
6. Connection angle acc. to the construction design
7. Damp-proof insulation acc. to the architectural design
8. Butyl mass (recommended)
9. Thermal insulation + plastering acc. to the architectural design

1.6. MW-W-ST06
Supporting panels below the upper level of the ground beam or foundation - horizontal arrangement of panels

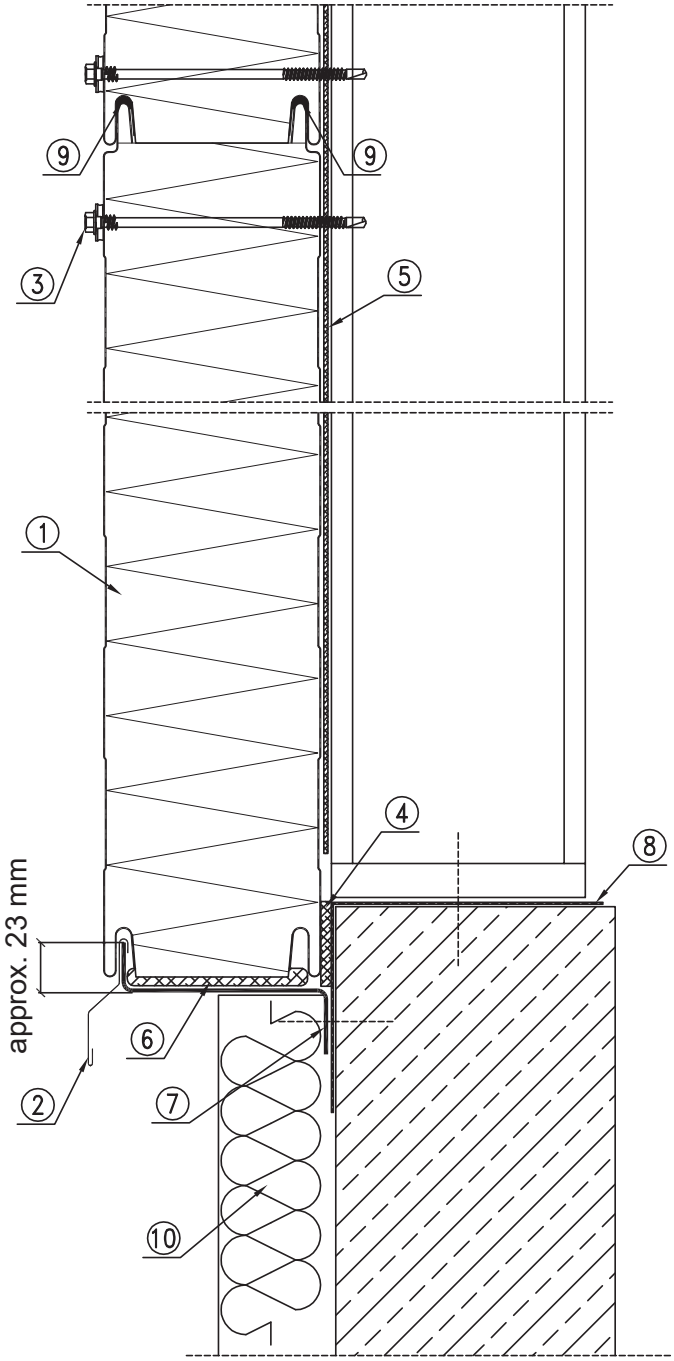

1. BALEXTHERM-MW-ST wall panel
2. OBR102 flashing or individual flashing
3. BALEXTHERM panel fastener: LB1 - LB5
4. PUS 5x40 adhesive sealing tape or equivalent
5. PES 3x20 adhesive sealing tape (recommended) or equivalent
6. Impregnated polyurethane gasket, thickness: 20mm or equivalent
7. Z-section acc. to the construction design
8. Damp-proof insulation acc. to the architectural design
9. Butyl mass (recommended)
10. Thermal insulation + plastering acc. to the architectural design

1.7. MW-W-ST07
Joining panels in the corner
- vertical arrangement of panels - variant I

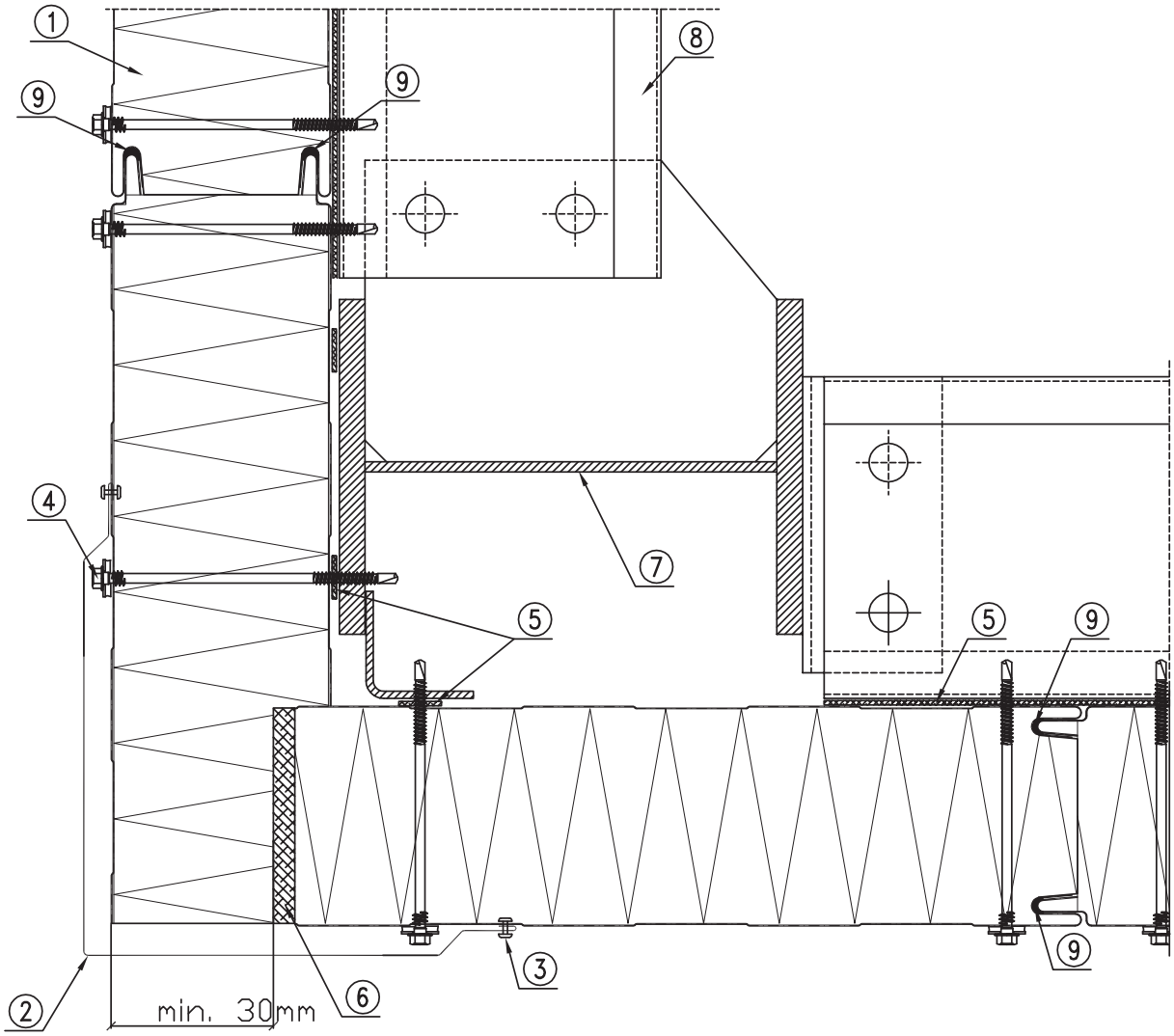

1. BALEXTHERM-MW-W-ST, BALEXTHERM-MW-D-W-ST, BALEXTHERM-MW-LT-W-ST wall panel
2. OBR103 flashing or individual flashing
3. LB6 self-drilling connector or blind rivet AL/Fe, approx. every 300 mm
4. BALEXTHERM panel fastener: LB1 - LB5
5. PES 3x20 adhesive sealing tape
6. Mineral wool or impregnated polyurethane expandable gasket
7. Steel, reinforced concrete, wooden column + connection angle acc. to the construction design
8. Transom acc. to the construction design
9. Butyl sealing - recommended

1.8. MW-W-ST08
Joining panels in the corner
- vertical arrangement of panels - variant II

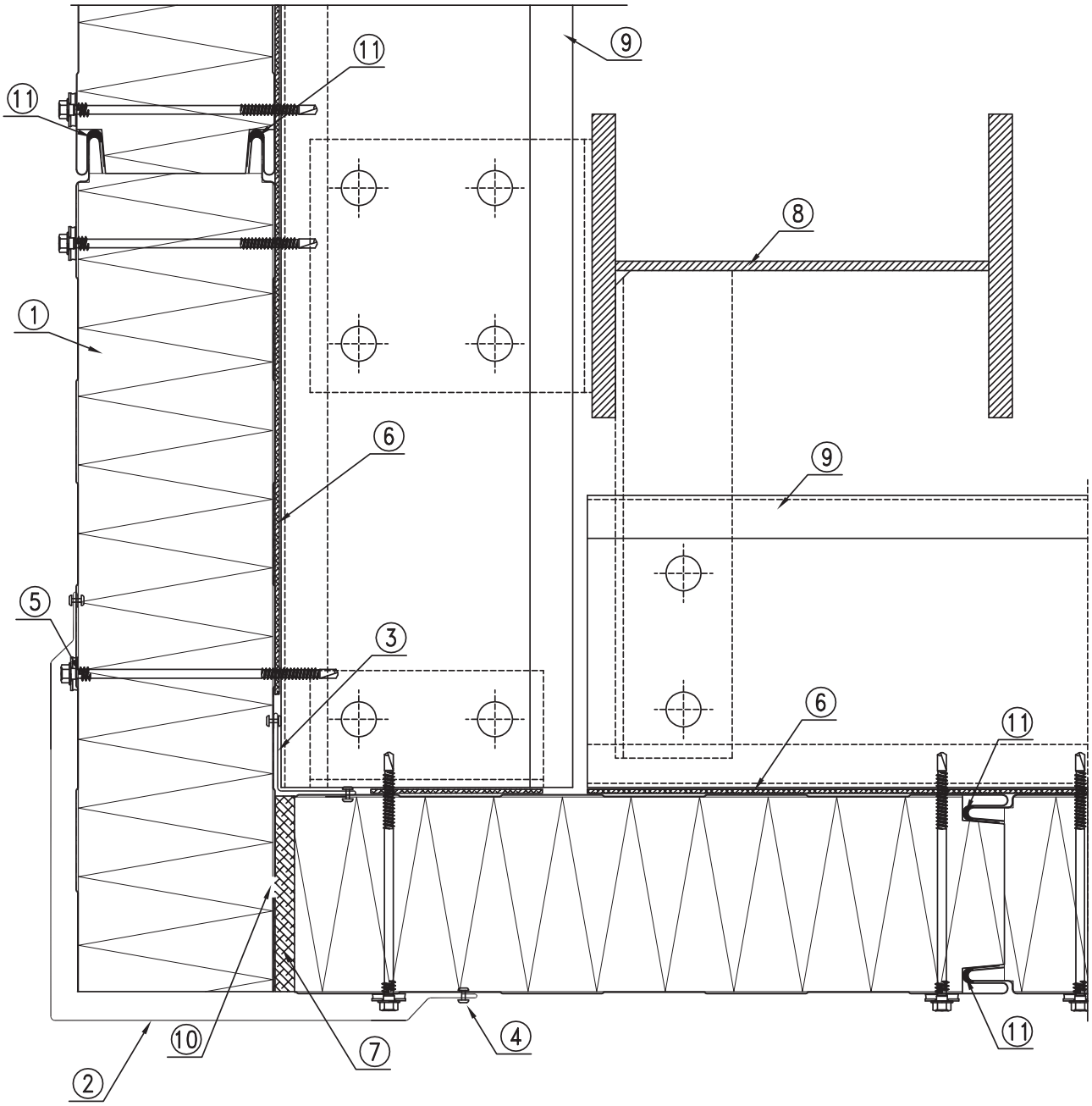

1. BALEXTHERM-MW-W-ST, BALEXTHERM-MW-D-W-ST, BALEXTHERM-MW-LT-W-ST wall panel
2. OBR103 flashing or individual flashing
3. OBR104 flashing or individual flashing
4. LB6 self-drilling connector or blind rivet AL/Fe, approx. every 300 mm
5. BALEXTHERM panel fastener: LB1 - LB5
6. PES 3x20 adhesive sealing panel (recommended)
7. Mineral wool or impregnated polyurethane expandable gasket
8. Steel, reinforced concrete, wooden column acc. to the construction design
9. Transom acc. to the construction design
10. Cladding with a 10mm wide gap (recommended for improving thermal insulation parameters)
11. Butyl sealing - recommended

1.9. MW-W-ST09/1
Joining panels in the corner
- vertical arrangement of panels

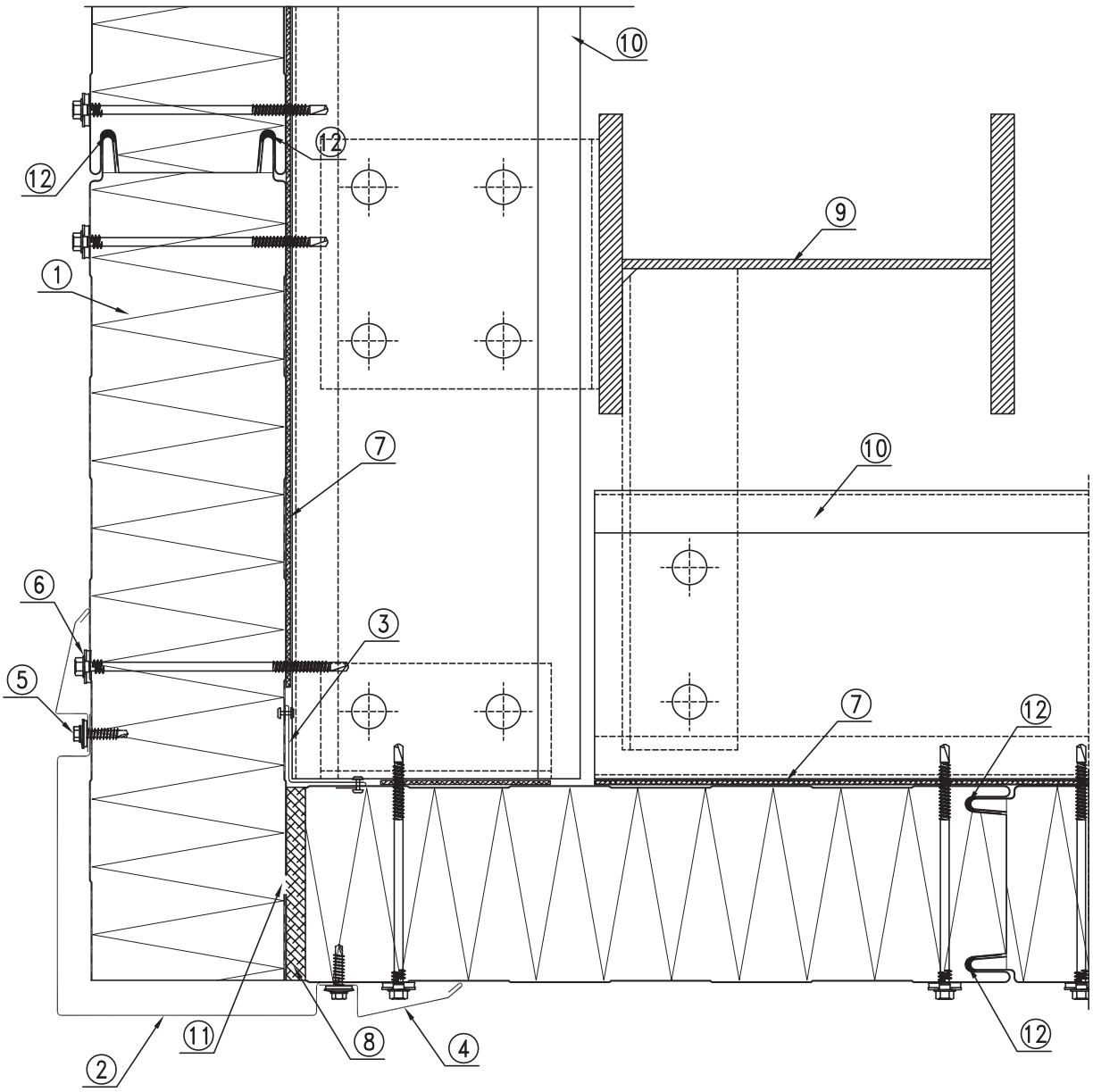

1. BALEXTHERM-MW-W-ST, BALEXTHERM-MW-D-W-ST, BALEXTHERM-MW-LT-W-ST wall panel
2. OBR113 flashing or individual flashing
3. OBR104 flashing or individual flashing
4. OBR111 flashing or individual flashing
5. LB6 self-drilling connector, approx. every 300 mm
6. BALEXTHERM panel fastener: LB1 - LB5
7. PES 3x20 adhesive sealing tape (recommended)
8. Mineral wool or polyurethane gasket
9. Steel, reinforced concrete, wooden column acc. to the construction design
10. Transom acc. to the construction design
11. Cladding with a 10mm wide gap for improving thermal insulation parameters
12. Butyl sealing - recommended

1.10. MW-W-ST09/2
Connecting panels in the corner
- horizontal arrangement of panels

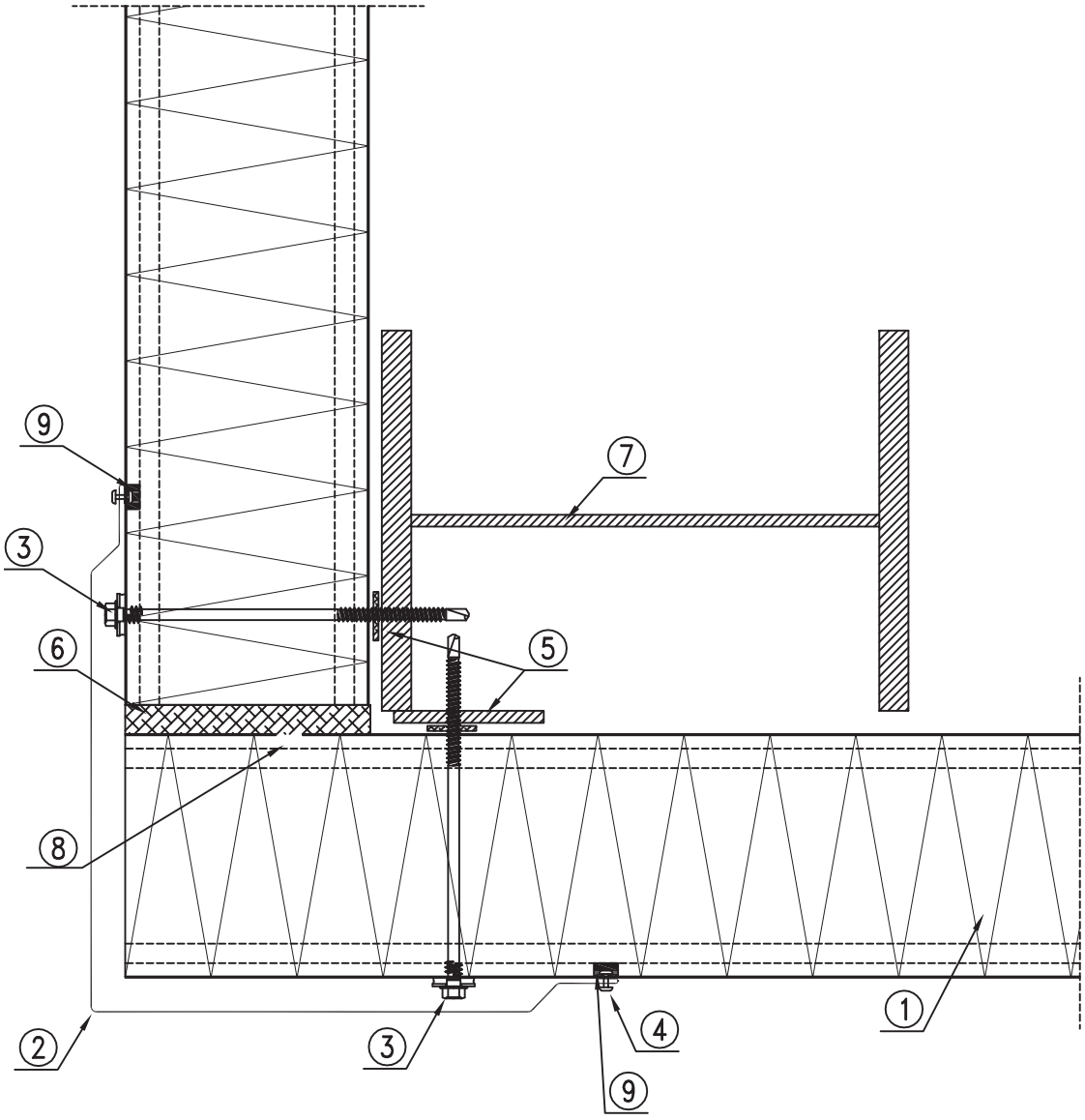

1. BALEXTHERM-MW-W-ST, BALEXTHERM-MW-D-W-ST, BALEXTHERM-MW-LT-W-ST wall panel
2. OBR103 flashing or individual flashing
3. BALEXTHERM panel fastener: LB1 - LB5
4. LB6 self-drilling connector or blind rivet AL/Fe, approx. every 300 mm
5. PES 3x20 adhesive sealing tape (recommended)
6. Mineral wool or expandable polyurethane gasket
7. Steel, reinforced concrete, wooden column + flat bar acc. to the construction design
8. Cladding with a 10mm wide gap (recommended for improving thermal insulation parameters)
9. Butyl mass - recommended

1.11. MW-W-ST10
Joining panels lengthwise
- vertical arrangement of panels

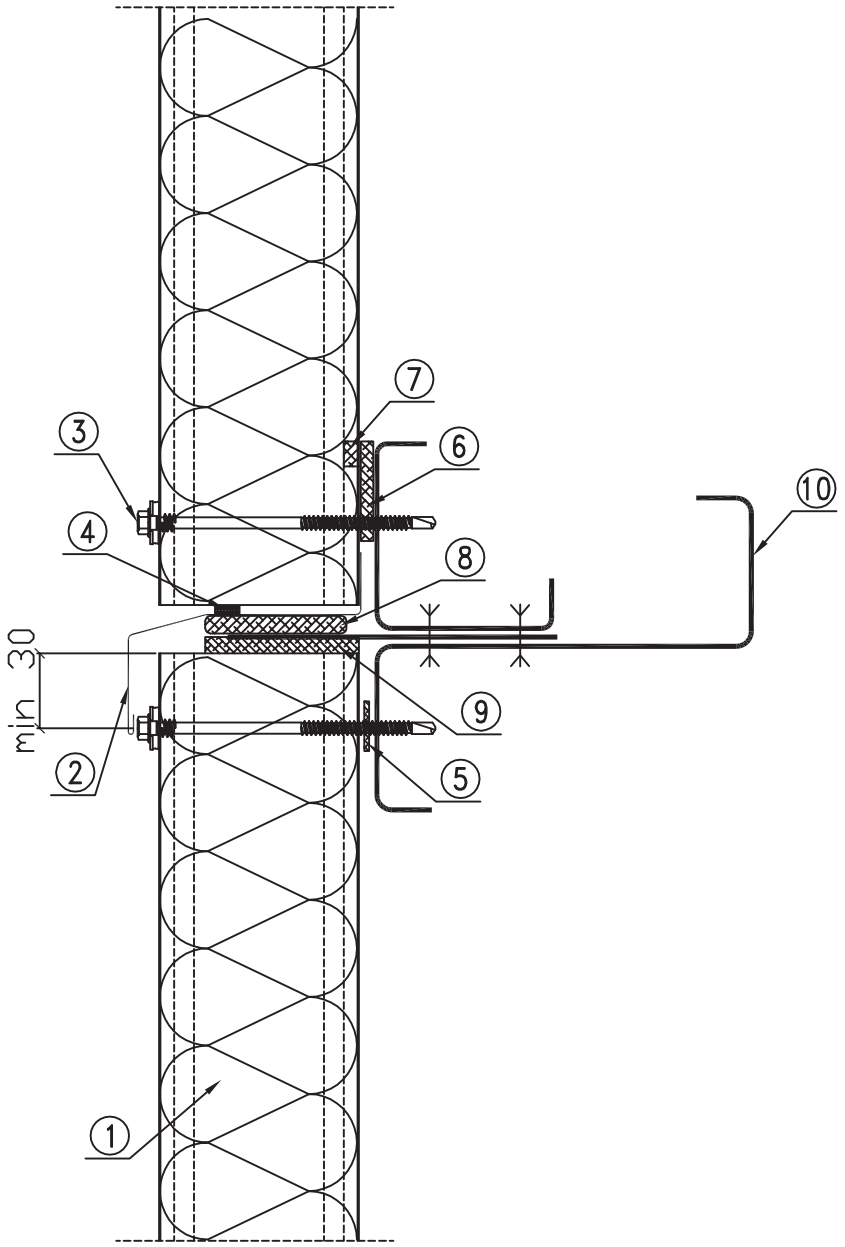

1. BALEXTHERM-MW-W-ST, BALEXTHERM-MW-D-W-ST, BALEXTHERM-MW-LT-W-ST wall panel
2. OBR100 flashing or individual flashing
3. BALEXTHERM panel fastener: LB1 - LB5
4. Butyl sealing tape (recommended)
5. PES 3x20 adhesive sealing tape (recommended) or equivalent
6. PUS 5x40 adhesive sealing tape or equivalent
7. Sealing mass in panel joint
8. Impregnated polyurethane joint, thickness: 20mm or equivalent
9. Mineral wool
10. Transom+ angle connector and flat bar acc. to the construction design

1.12. MW-W-ST11/1
Fastening panel to the end support
- horizontal arrangement of panels - variant I

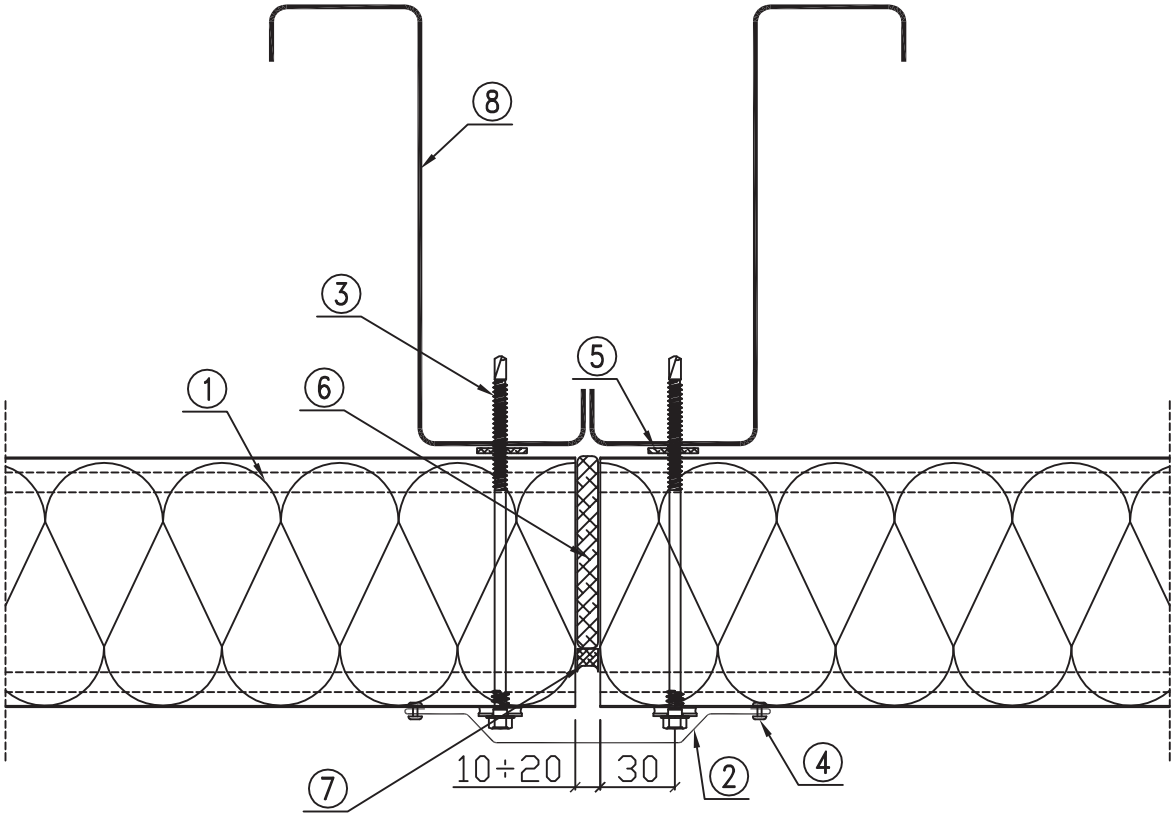

1. BALEXTHERM-MW-W-ST, BALEXTHERM-MW-D-W-ST, BALEXTHERM-MW-LT-W-ST wall panel
2. OBR105 flashing or individual flashing
3. BALEXTHERM panel fastener: LB1 - LB5
4. Blind rivet AL/Fe or self-drilling connector LB6 approx. every 300 mm
5. PES 3x20 adhesive sealing tape (recommended) or equivalent
6. Impregnated polyurethane expandable gasket or mineral wool
7. Impregnated polyurethane expandable tape 10x4 (20) or equivalent
8. Bearing column acc. to the construction design

1.13. MW-W-ST11/2
Fastening panels to the end support
- horizontal arrangement of panels - variant II

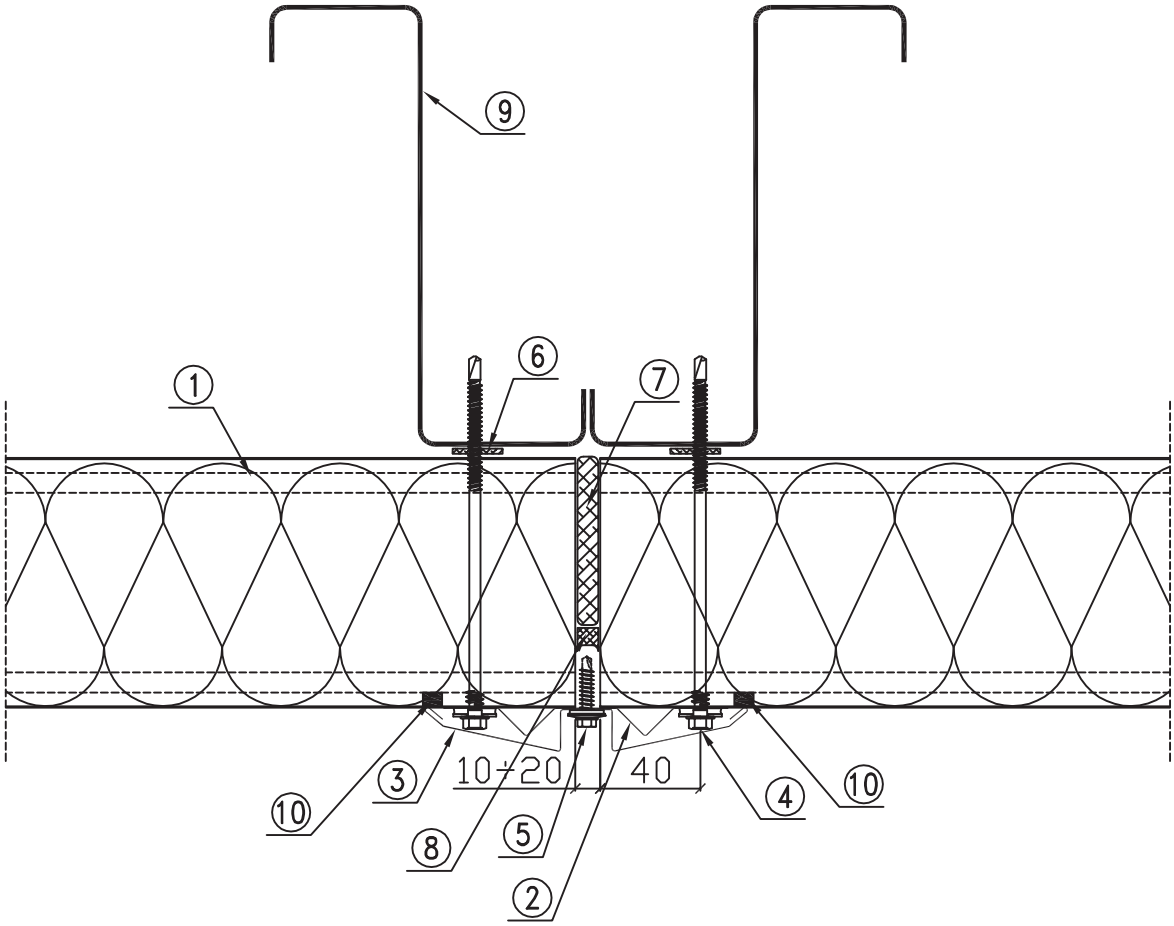

1. BALEXTHERM-MW-W-ST, BALEXTHERM-MW-D-W-ST, BALEXTHERM-MW-LT-W-ST wall panel
2. OBR110 flashing (holes for fasteners item 4 should be made during assembly)
3. OBR111 flashing
4. BALEXTHERM panel fastener: LB1 - LB5
5. ŁB6 self-drilling connector approx. every 300 mm
6. PES 3x20 adhesive sealing tape (recommended) or equivalent
7. Impregnated polyurethane expandable gasket or mineral wool
8. Illmod expandable gasket (recommended)
9. Bearing column acc. to the construction design
10. Butyl mass - recommended

1.14. MW-W-ST12
Fastening the panel to the in-between support
- horizontal arrangement of panels

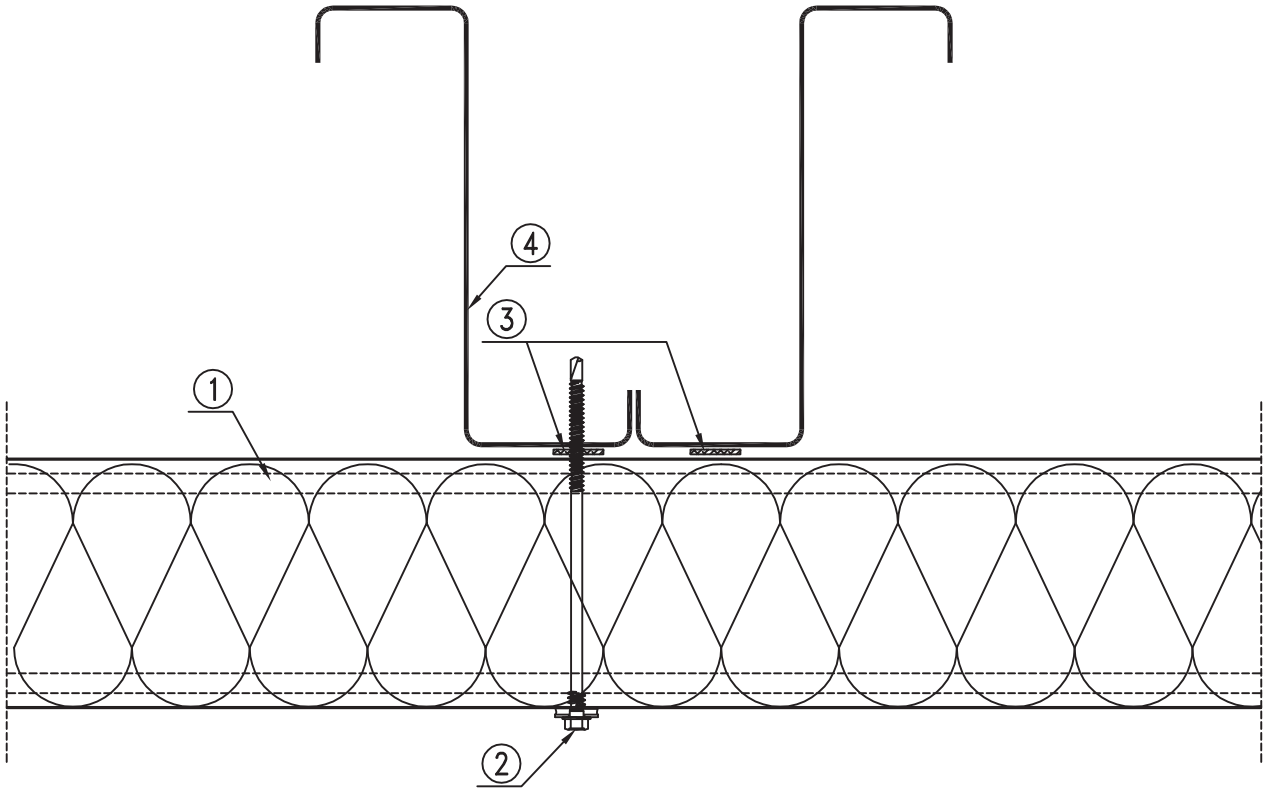

1. BALEXTHERM-MW-W-ST, BALEXTHERM-MW-D-W-ST, BALEXTHERM-MW-LT-W-ST wall panel
2. LB 1- LB 5 fasteners for fastening BALEXTHERM panels
3. PES 3x20 self-adhesive sealing tape (recommended) or equivalent
4. Bearing post according to the structural design

1.15. MW-W-ST13
Joining panels with window strip
- vertical arrangement of panels - option I

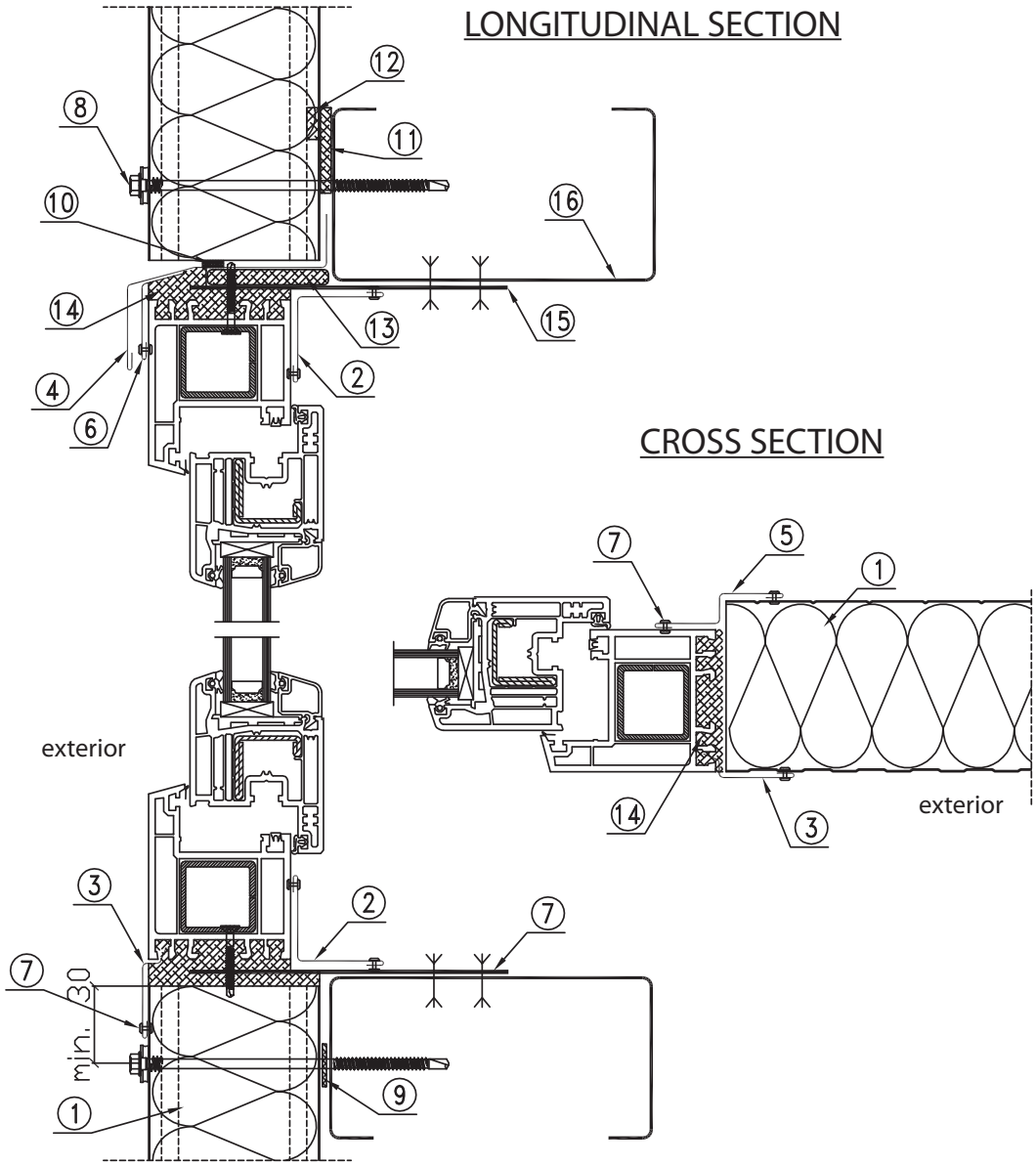

1. BALEXTHERM-MW-W-ST, BALEXTHERM-MW-D-W-ST, BALEXTHERM-MW-LT-W-ST wall panel
2. OBR 104 flashing or individual flashing
3. OBR 106 flashing or individual flashing
4. OBR 100 flashing or individual flashing
5. Individual flashing
6. Individual flashing
7. LB 6 self-drilling fastener or AL/Fe blind rivet every 300mm
8. LB 1- LB 5 fasteners for fastening BALEXTHERM panels
9. PES 3x20 self-adhesive sealing tape (recommended) or equivalent
10. Butyl sealing tape (recommended)
11. PUS 5x40 self-adhesive sealing tape or equivalent
12. Sealing compound in the panel joint area
13. Impregnated polyurethane gasket 10mm thick or equivalent
14. Mineral wool
15. Flat bar for fastening a window
16. Bearing lock acc. to the construction design

1.16. MW-W-ST14
Joining panels with window strip
- vertical arrangement of panels - option II

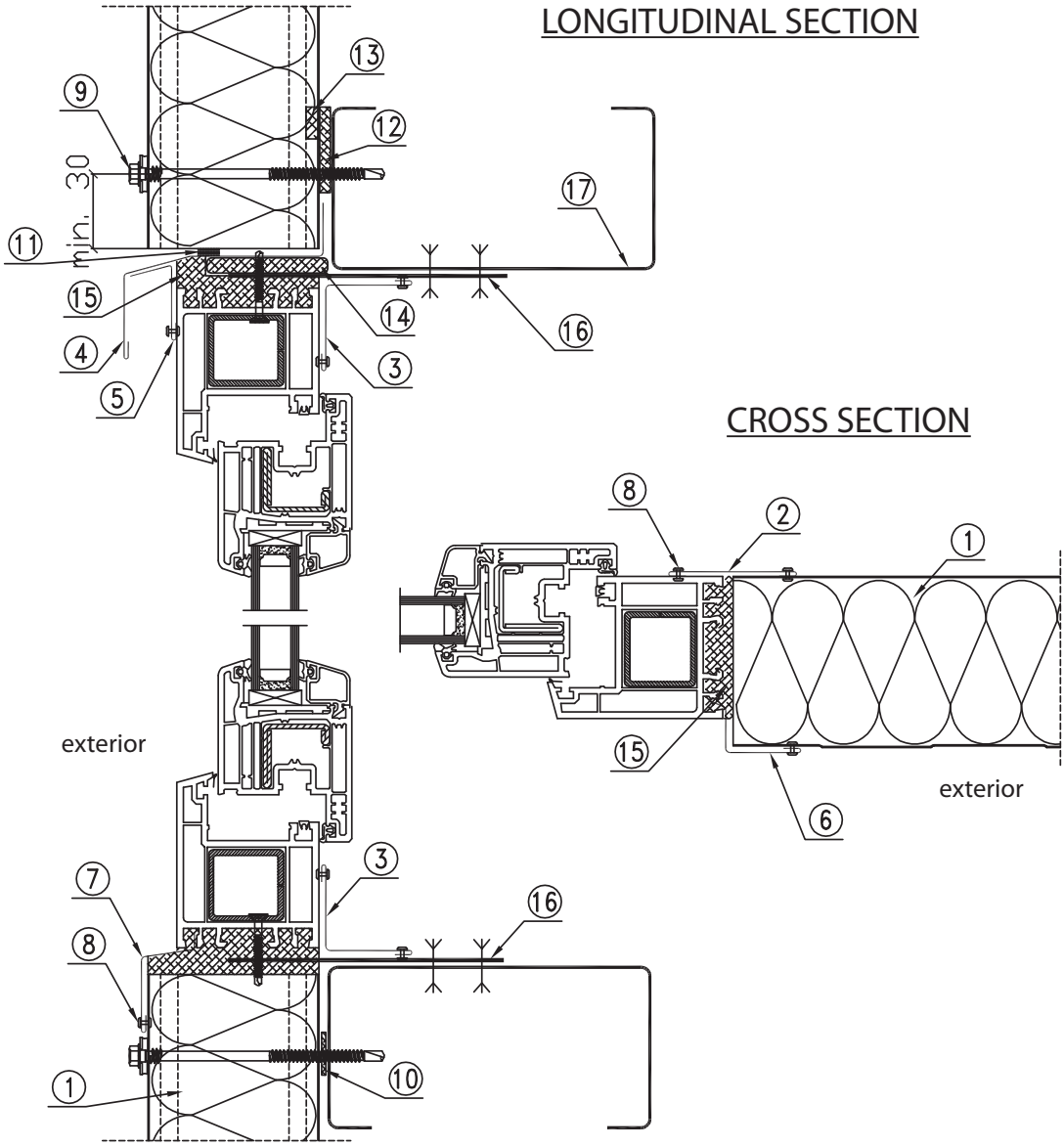

1. Płyta ścienna BALEXTHERM-MW-W-ST, BALEXTHERM-MW-D-W-ST, BALEXTHERM-MW-LT-W-ST
2. OBR 106 flashing or individual flashing
3. OBR 104 flashing or individual flashing
4. OBR 100 flashing or individual flashing
5. Individual flashing
6. Individual flashing
7. Individual flashing
8. LB 6 self-drilling fastener or AL/Fe blind rivet every 300mm
9. LB 1- LB 5 fasteners for fastening BALEXTHERM panels
10. PES 3x20 self-adhesive sealing tape (recommended) or equivalent
11. Butyl sealing tape (recommended)
12. PUS 5x40 self-adhesive sealing tape or equivalent
13. Sealing compound in the panel joint area
14. Impregnated polyurethane gasket 10mm thick or equivalent
15. Mineral wool
16. Flat bar for fastening a window
17. Bearing lock acc. to the construction design

1.17. MW-W-ST15
Joining panels with window strip
- vertical arrangement of panels - option III

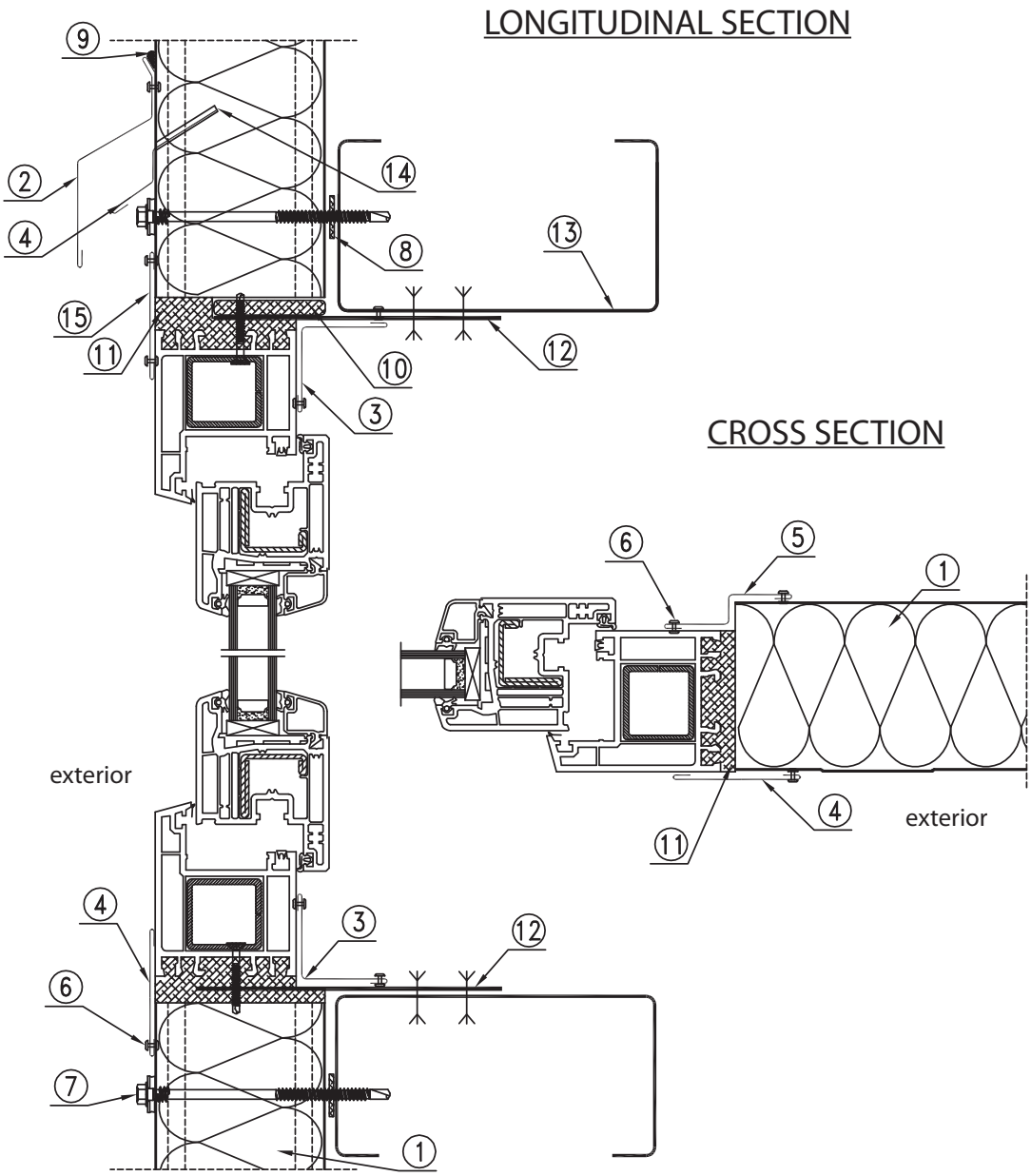

1. BALEXTHERM-MW-W-ST, BALEXTHERM-MW-D-W-ST, BALEXTHERM-MW-LT-W-ST wall panel
2. OBR 107 flashing or individual flashing
3. OBR 104 flashing or individual flashing
4. Individual flashing (cut a groove in foam)
5. Individual flashing
6. LB 6 self-drilling fastener or AL/Fe blind rivet every 300mm
7. LB 1- LB 5 fasteners for fastening BALEXTHERM panels
8. PES 3x20 self-adhesive sealing tape (recommended) or equivalent
9. Butyl sealing tape (recommended)
10. Impregnated polyurethane gasket 10mm thick or equivalent
11. Mineral wool
12. Flat bar for fastening a window
13. Bearing lock acc. to the construction design
14. Indent at panel joint
15. Individual flashing

1.18. MW-W-ST16/1
Joining panels with PVC windows
- vertical arrangement of panels - option II

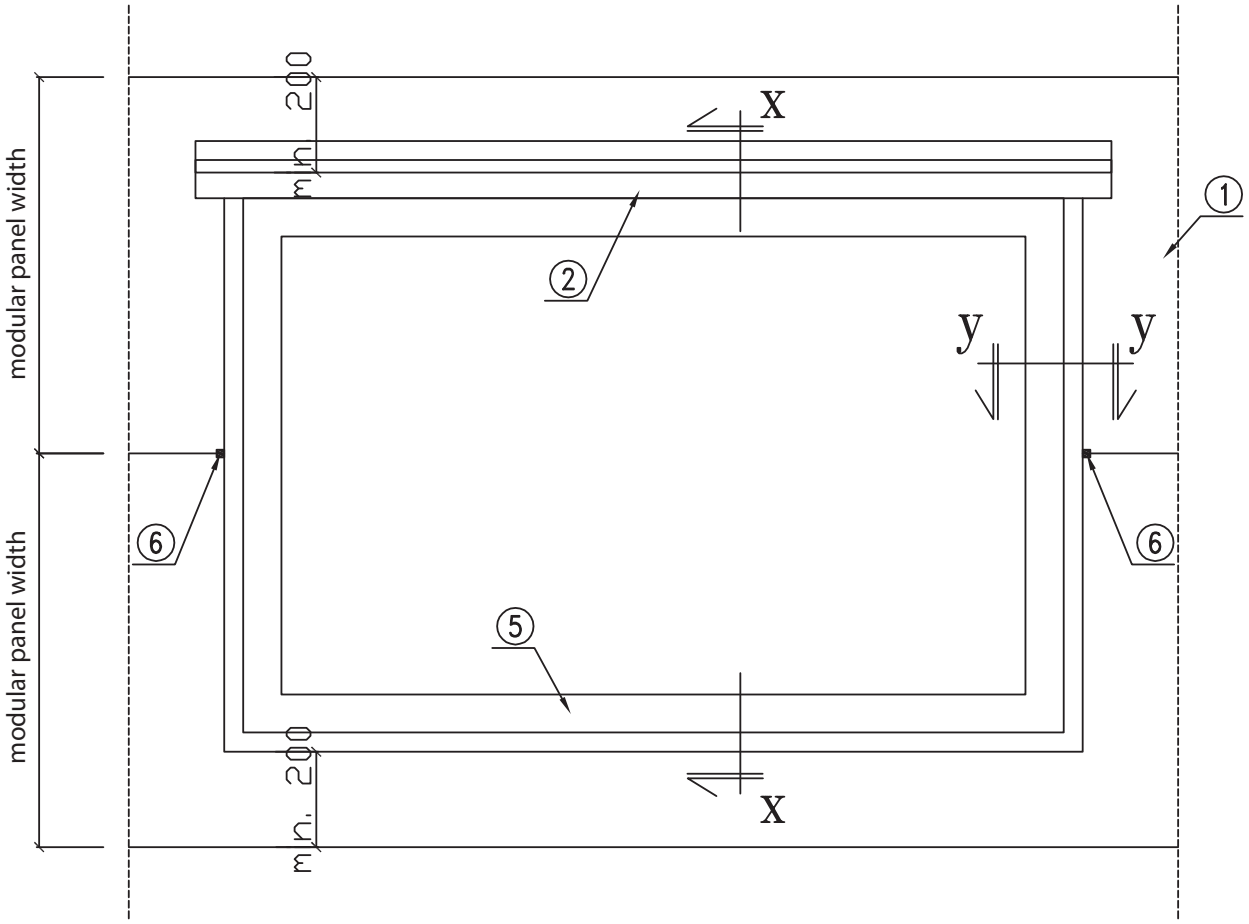

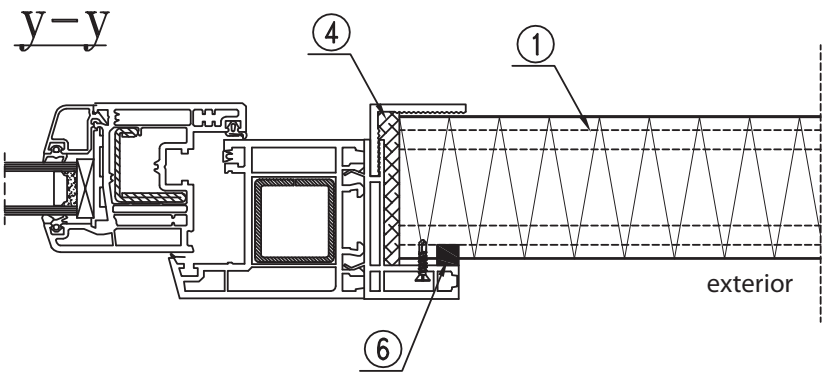

1. BALEXTHERM-MW-W-ST, BALEXTHERM-MW-D-W-ST, BALEXTHERM-MW-LT-W-ST wall panel
2. OBR 107 or individual flashing
4. Impregnated polyurethane gasket or mineral wool
5. PVC window
6. Permanently flexible compound in the lock under the window`s assembly profile

1.19. MW-W-ST16/2
Joining panels with PCV windows
- vertical or horizontal arrangement of panels

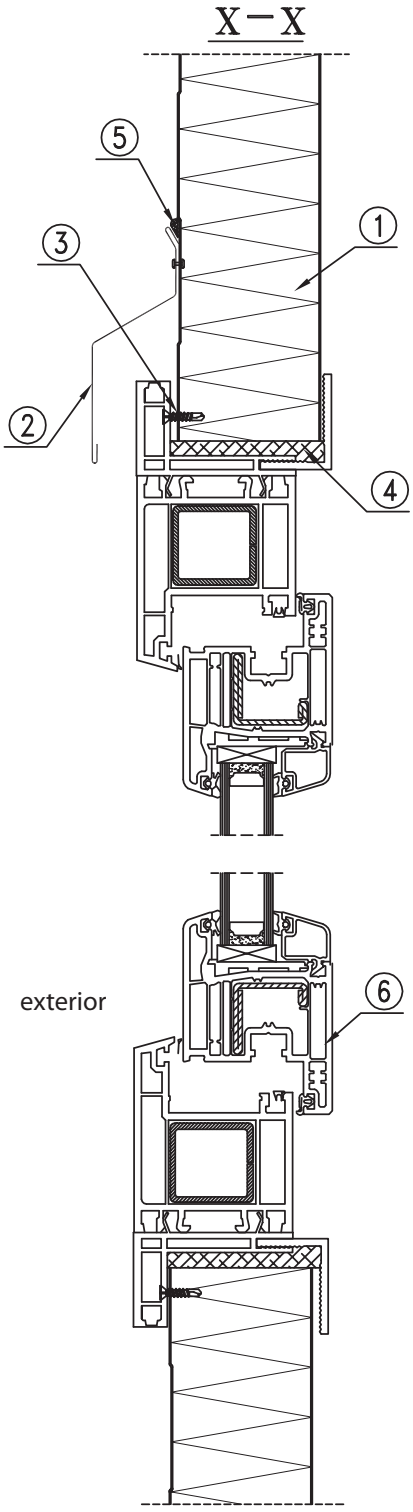

1. BALEXTHERM-MW-W-ST, BALEXTHERM-MW-D-W-ST, BALEXTHERM-MW-LT-W-ST wall panel
2. OBR 107 or individual flashing
3. LB 6 self-drilling fastener or AL/Fe blind rivet every 300mm
4. Impregnated polyurethane gasket or mineral wool
5. Sealing compound
6. PVC window

1.20. MW-W-ST17
Fastening panels - sliding connection, recommended for dark colours of facades - vertical arrangement of panels

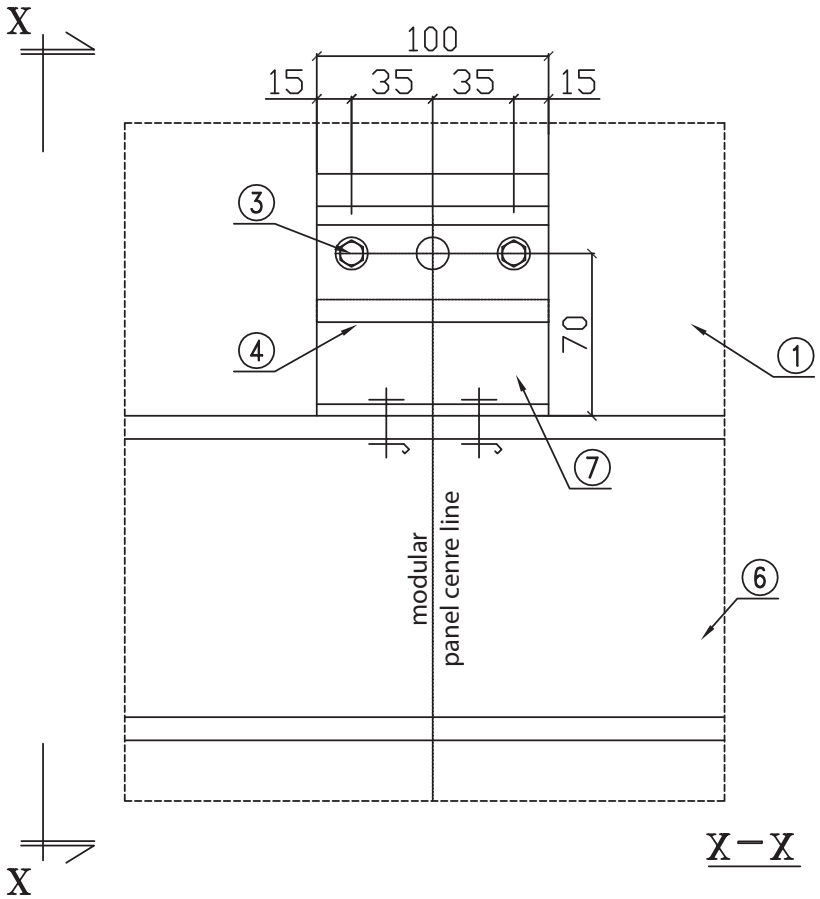

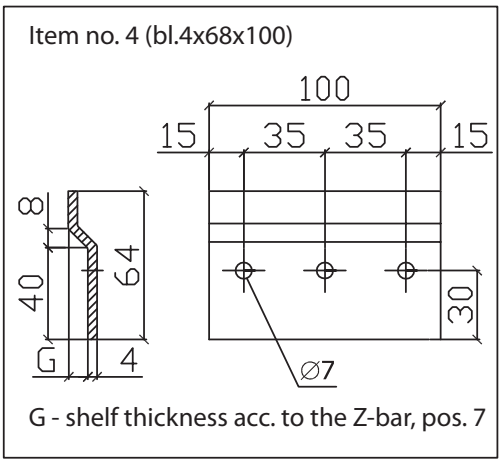

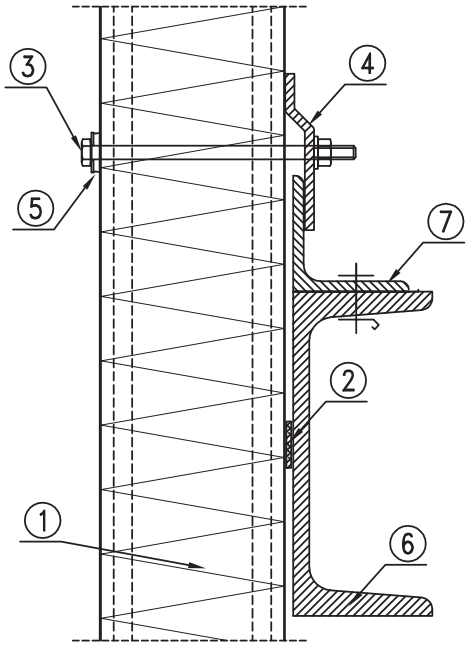

1. BALEXTHERM-MW-W-ST wall panel
2. PES 3x20 self-adhesive sealing tape (recommended) or equivalent
3. M6 screw with a self-locking nut
4. Steel washer (sheet 4x68x100) - individual
5. Washer with cured EPDM (recommended T19/3/6,7 SFS)
6. Transom acc. to the construction design
7. Angle acc. to the construction design

2. BALEXTHERM-PU-W-PLUS WALL PANELS

2.1. MW-W-PL01
BALEXTHERM-MW-W-PLUS wall panels, joint, profile types

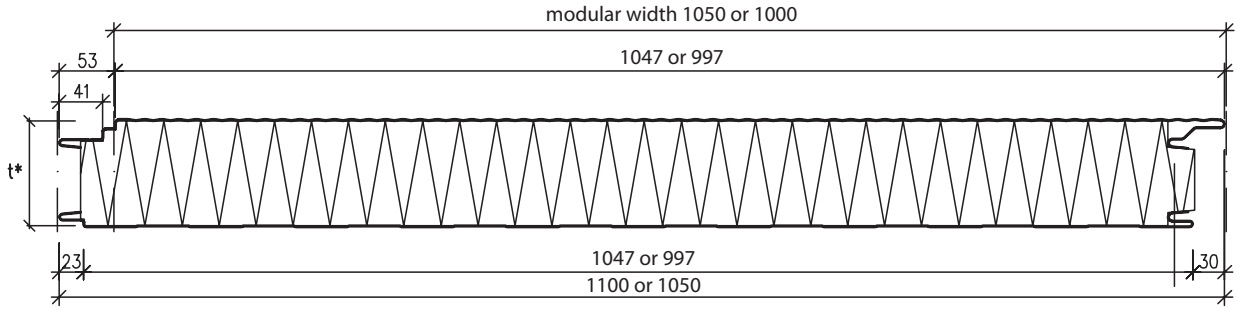

***Range of panel thicknesses t = 80; 100; 120; 130; 140; 150; 160; 180; 200 [mm]**

Panel joint

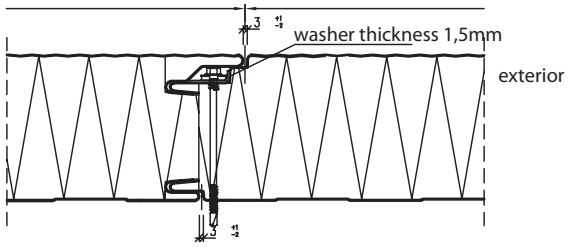

Panel joint with gasket (option)

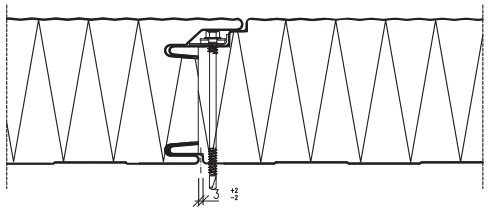

EXTERNAL FACINGS:

L
lined

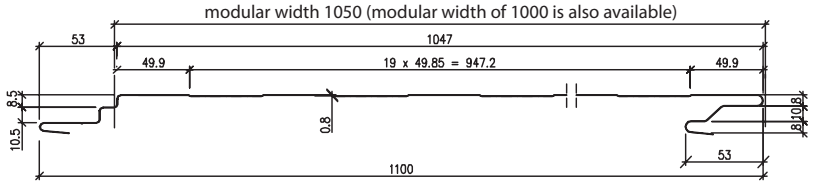

M
microprofiled

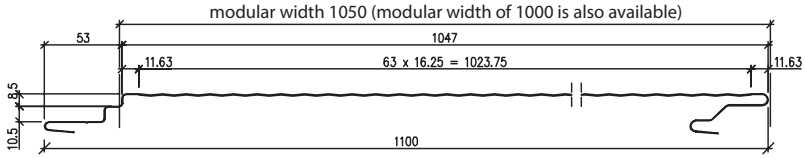

R
grooved

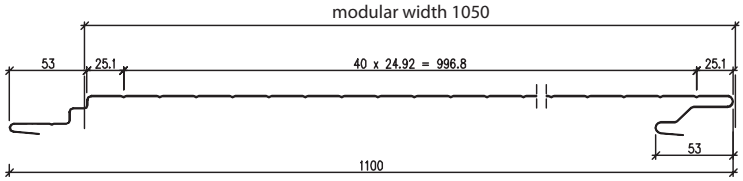

G*
flat

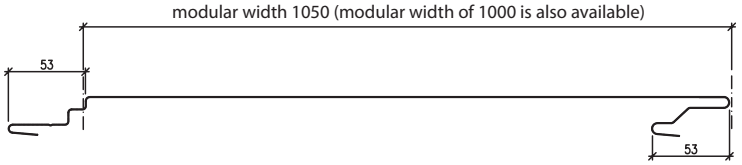

INTERNAL FACINGS:

L
lined

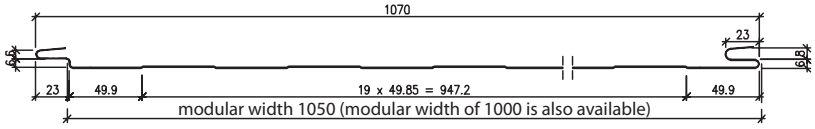

G*
flat

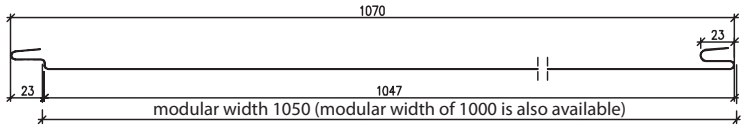

* Available only for the cladding thickness > 0,5 mm

2.2. MW-W-PL02
Fastening panels
– vertical arrangement of panels

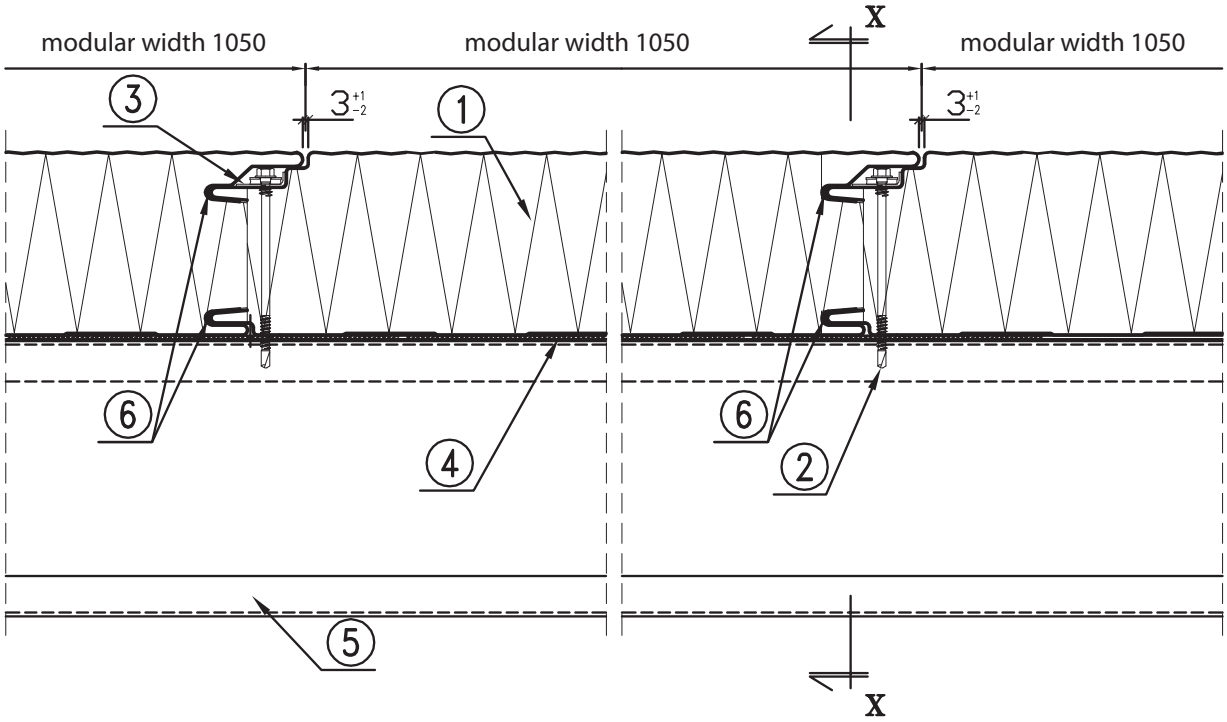

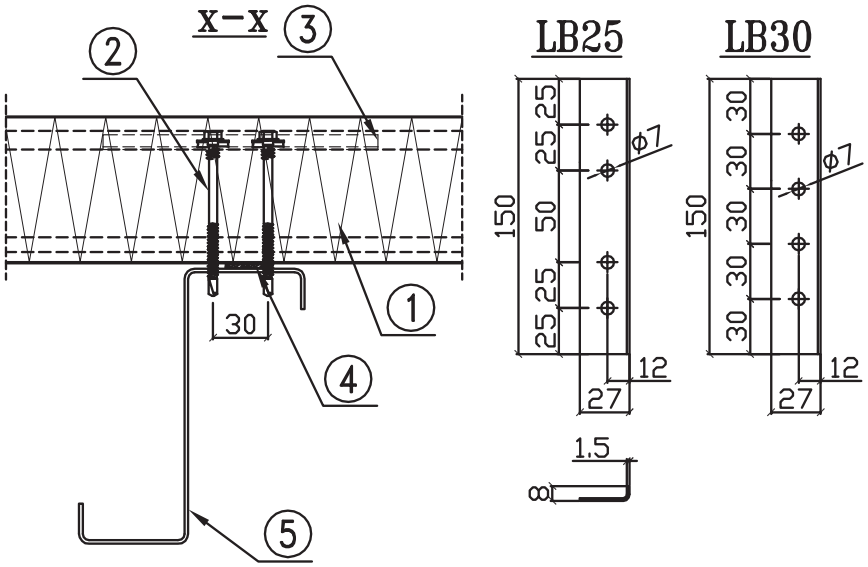

1. BALEXTHERM-MW-W-PLUS wall panel
2. LB 1- LB 5 fasteners for fastening BALEXTHERM panels
3. LB25 or LB 30 system steel washer
4. PES 3x20 self-adhesive sealing tape (recommended) or equivalent
5. Steel bolt: cold-bent or hot-rolled, wooden etc. acc. to the construction design
6. Butyl sealing - recommended

2.3. MW-W-PL03
Basing panels on a ground beam or foundation - vertical arrangement of panels

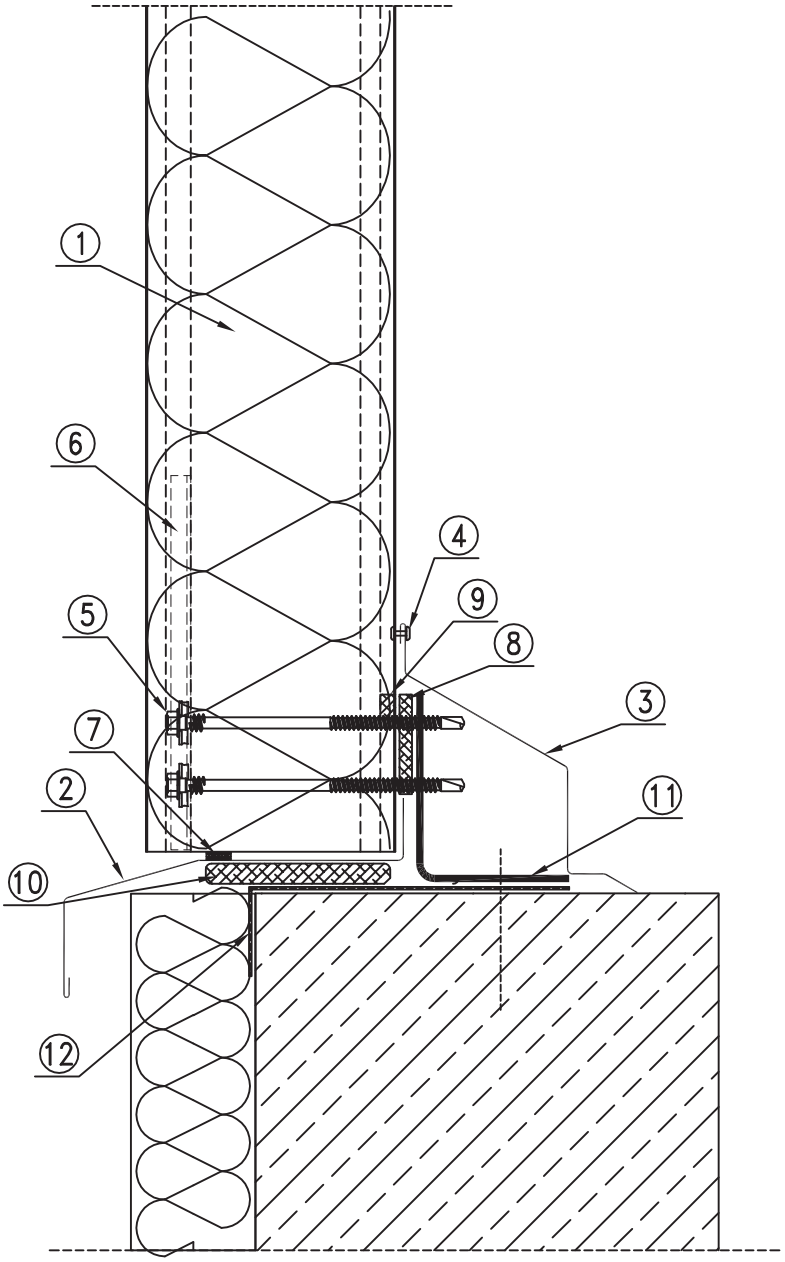

1. BALEXTHERM-MW-W-PLUS wall panel
2. OBR 100 flashing or individual flashing
3. OBR 101 flashing or individual flashing
4. LB 6 self-drilling fastener or AL/Fe blind rivet every 300mm
5. LB 1 or LB 2 fastener for fastening BALEXTHERM panels
6. LB 25 steel washer under fasteners
7. Butyl sealing tape (recommended)
8. PUS 5x40 self-adhesive sealing tape or equivalent
9. Sealing compound in the panel joint area
10. Impregnated polyurethane gasket 20mm thick or equivalent
11. Angle acc. to the construction design
12. Dampproof insulation according to the architectural design
13. Thermal insulation + plastering according to the architectural design

2.4. MW-W-PL04
Supporting panels below the upper level of the ground beam or foundation - vertical arrangement of panels

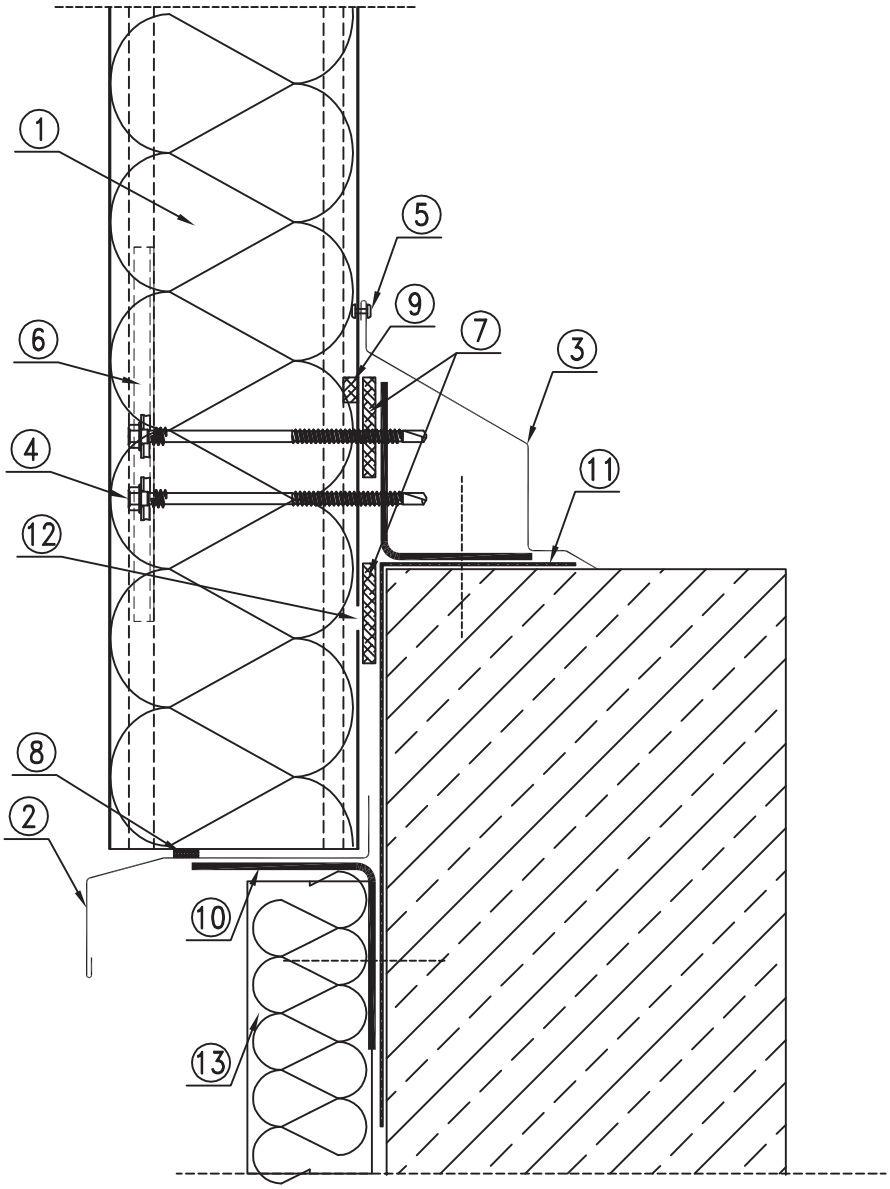

1. BALEXTHERM-MW-W-PLUS wall panel
2. OBR 100 flashing or individual flashing
3. OBR 101 flashing or individual flashing
4. LB 1 or LB 2 fastener for fastening BALEXTHERM panels
5. LB 6 self-drilling fastener or AL/Fe blind rivet every 300mm
6. LB 25 steel washer under fasteners
7. PUS 5x40 self-adhesive sealing tape or equivalent
8. Butyl sealing tape (recommended)
9. Sealing compound in the panel joint area
10. Angle acc. to the construction design
11. Dampproof insulation according to the architectural design
12. Ground beam thermal insulation + plastering acc. to the architectural design

* recommended for improving thermal insulation dla properties

13. Thermal insulation + plastering acc. to the architectural design

2.5. MW-W-PL05
Supporting panels below the upper level of the ground beam or foundation - horizontal arrangement of panels

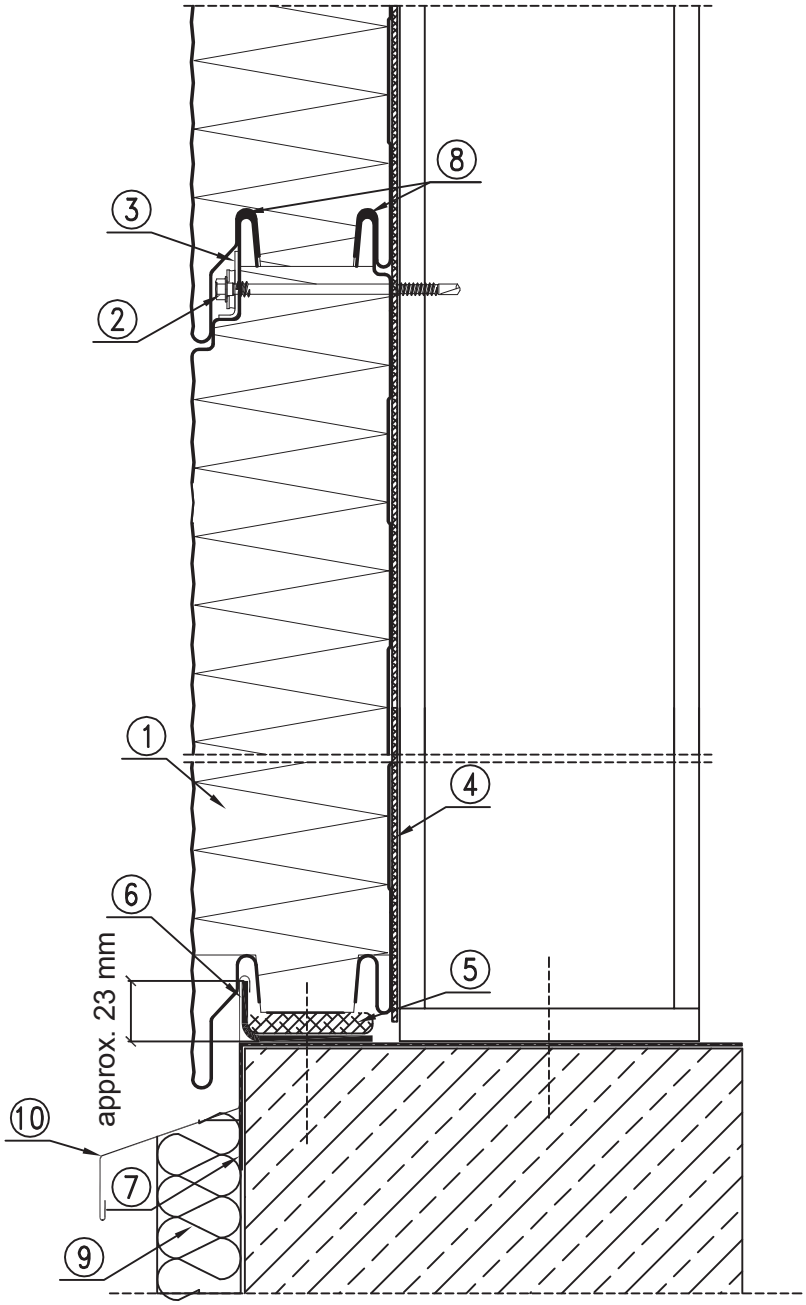

1. BALEXTHERM-MW-W-PLUS wall panel
2. LB 1- LB 5 fasteners for fastening BALEXTHERM panels
3. LB 25 steel washer under fasteners
4. PES 3x20 self-adhesive sealing tape (recommended) or equivalent
5. Impregnated polyurethane gasket 20mm thick or equivalent
6. Angle acc. to the construction design
7. Dampproof insulation according to the architectural design
8. Thermal insulation + plastering according to the architectural design
9. Individual flashing
10. Individual flashing

2.6. MW-W-PL06
Supporting panels below the upper level of the ground beam or foundation - horizontal arrangement of panels

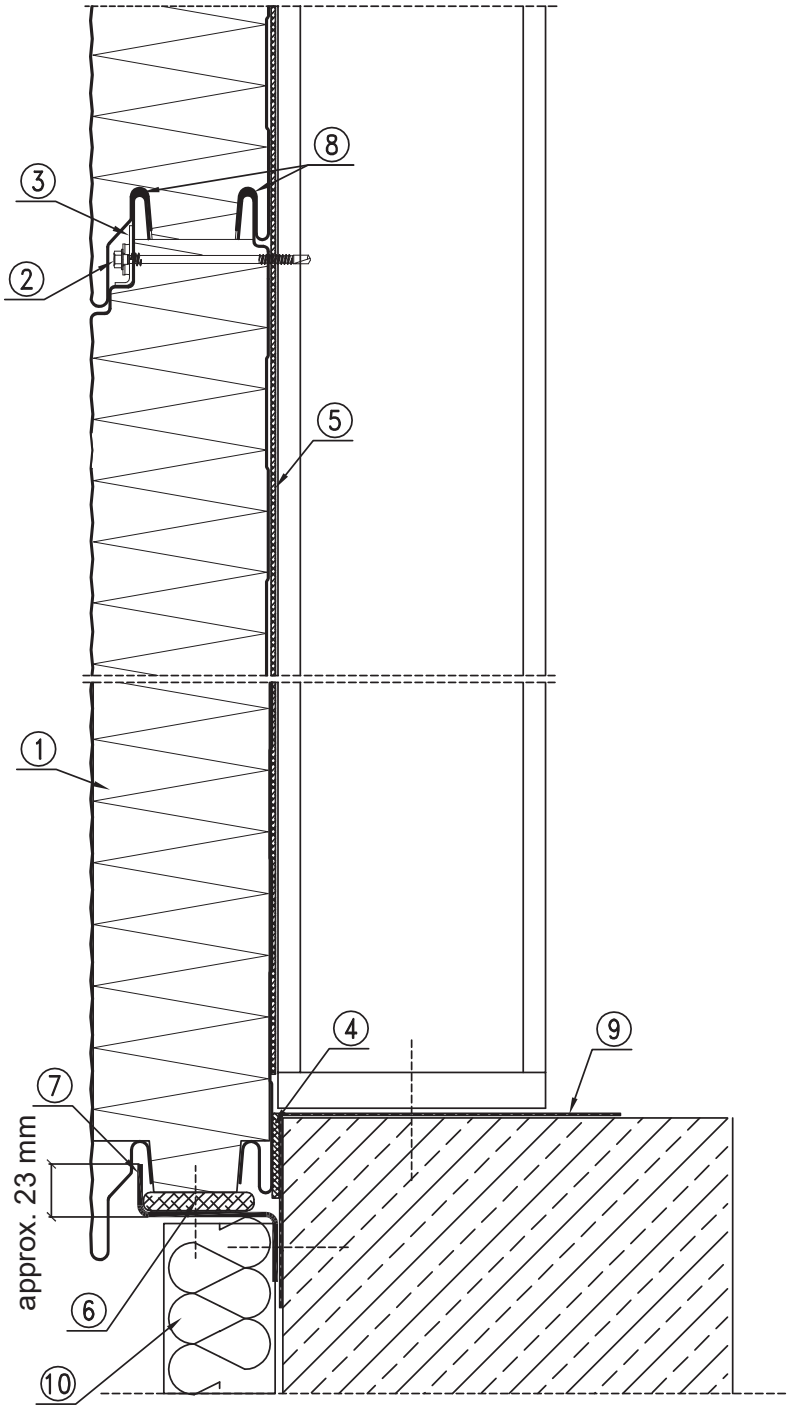

1. BALEXTHERM-MW-W-PLUS wall panel
2. LB 1- LB 5 fasteners for fastening BALEXTHERM panels
3. LB 25 steel washer under fasteners
4. PUS 5x40 self-adhesive sealing tape or equivalent
5. PES 3x20 self-adhesive sealing tape (recommended) or equivalent
6. Impregnated polyurethane gasket 20mm thick or equivalent
7. Z-bar acc. to the construction design
8. Butyl sealing - recommended
9. Dampproof insulation acc. to the architecture design
10. Thermal insulation + plastering according to the architectural design

2.7. MW-W-PL07
Joining panels in the corner
- vertical arrangement of panels - option I

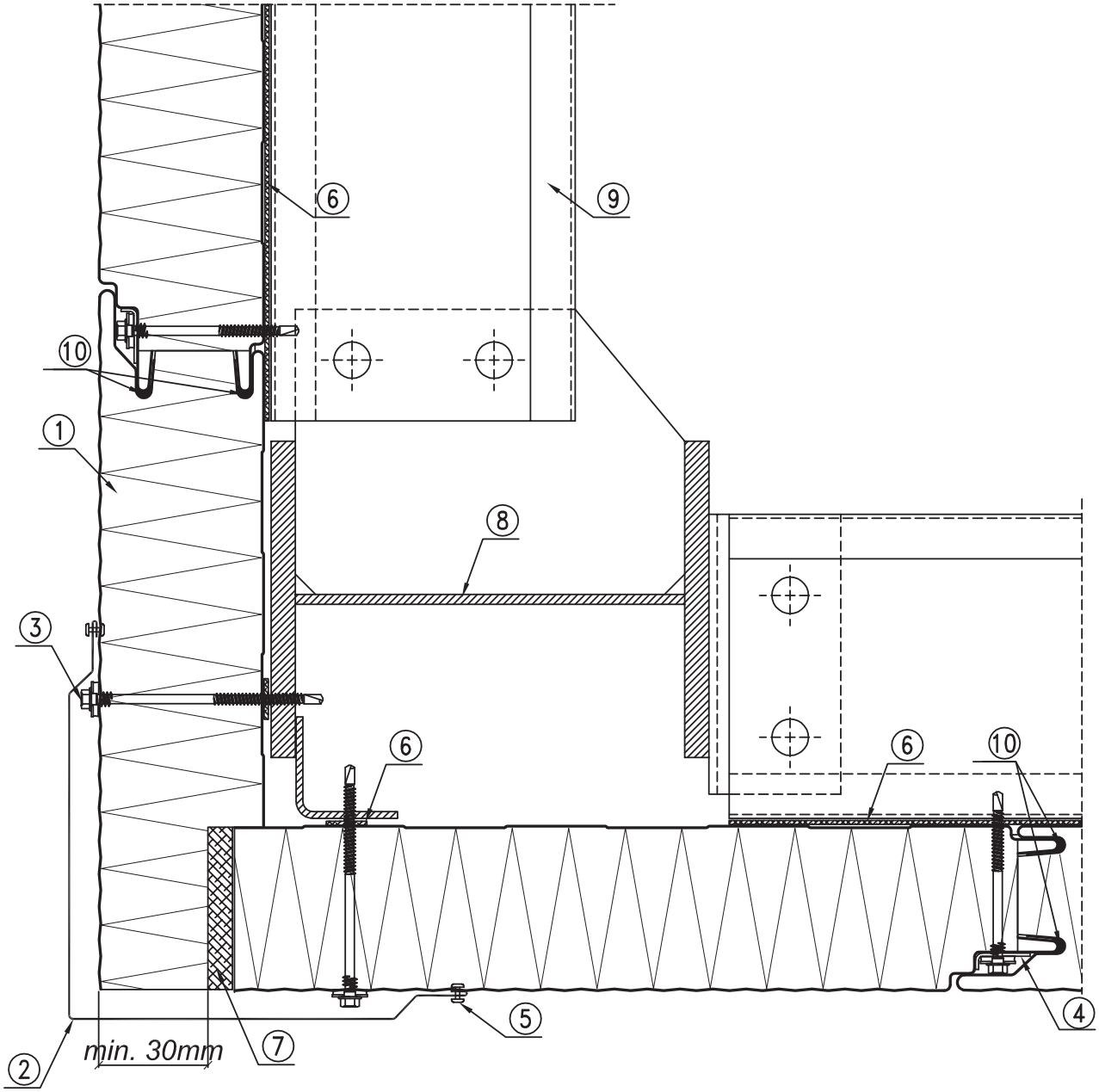

1. BALEXTHERM-MW-W-PLUS wall panel
2. OBR 103 flashing or individual flashing
3. LB 1- LB 5 fasteners for fastening BALEXTHERM panels
4. LB 25 or LB 30 steel washer under fasteners
5. LB6 self-drilling fastener or AL/Fe blind rivet every 300mm
6. PES 3x20 self-adhesive sealing tape (recommended) or equivalent
7. Mineral wool or impregnated polyurethane expansion gasket
8. Bearing column + angle acc. to the construction design
9. Transom acc. to the construction design
10. Butyl sealing - recommended

2.8. MW-W-PL08
Joining panels in the corner
- vertical arrangement of panels - option II

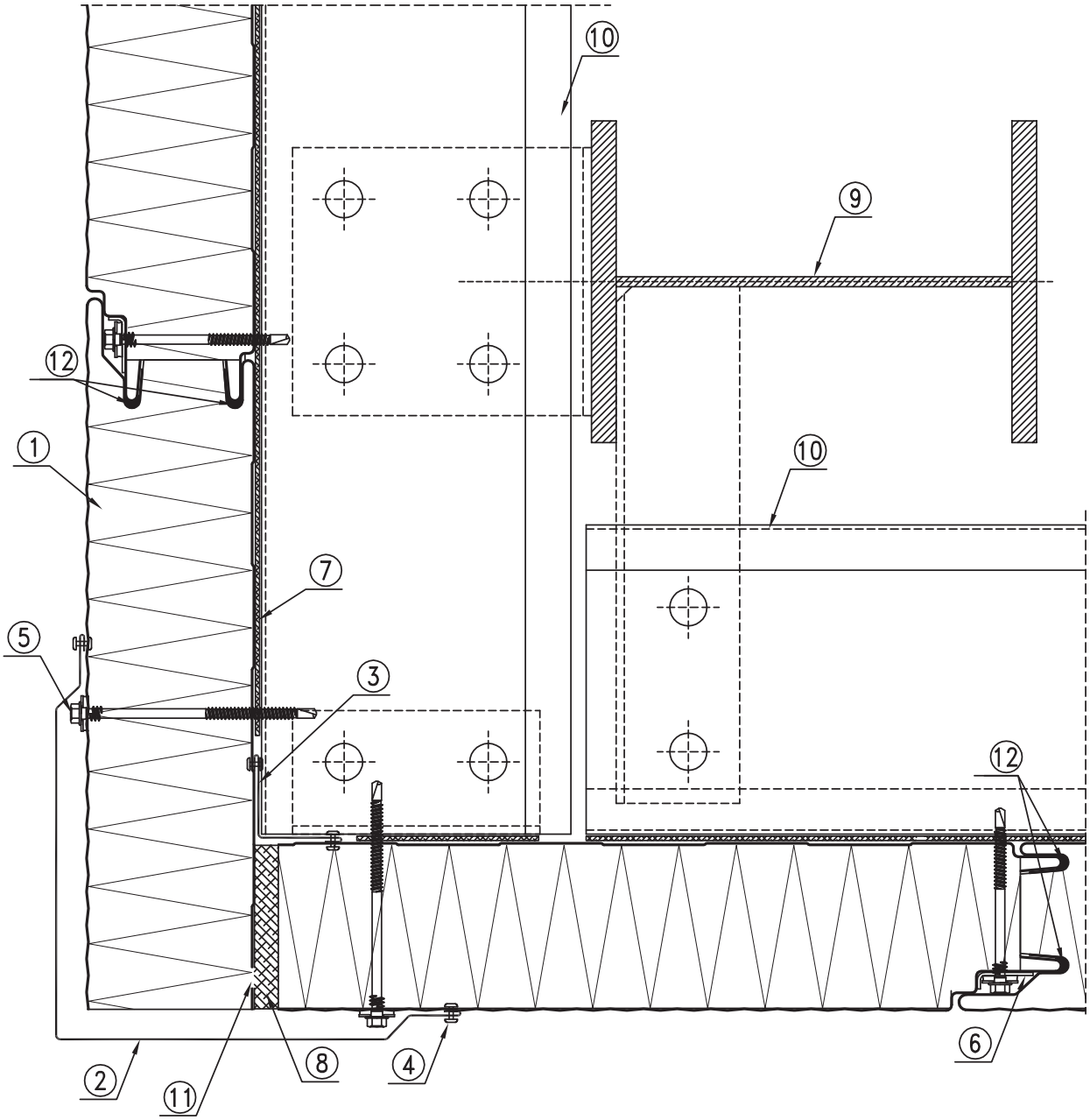

1. BALEXTHERM-MW-W-PLUS wall panel
2. OBR 103 flashing or individual flashing
3. OBR 104 flashing or individual flashing
4. LB 6 self-drilling fastener or AL/Fe blind rivet every 300mm
5. LB 1- LB 5 fasteners for fastening BALEXTHERM panels
6. LB 25 steel washer under fasteners
7. PES 3x20 self-adhesive sealing tape (recommended) or equivalent
8. Mineral wool or polyurethane expansion gasket
9. Steel, reinforced concrete, wooden column acc. to the construction design
10. Transom acc. to the construction design
11. Cladding with a 10mm wide gap (recommended to improve thermal insulation efficiency)
12. Butyl sealing - recommended

2.9. MW-W-PL09
Joining panels in the corner
- horizontal arrangement of panels

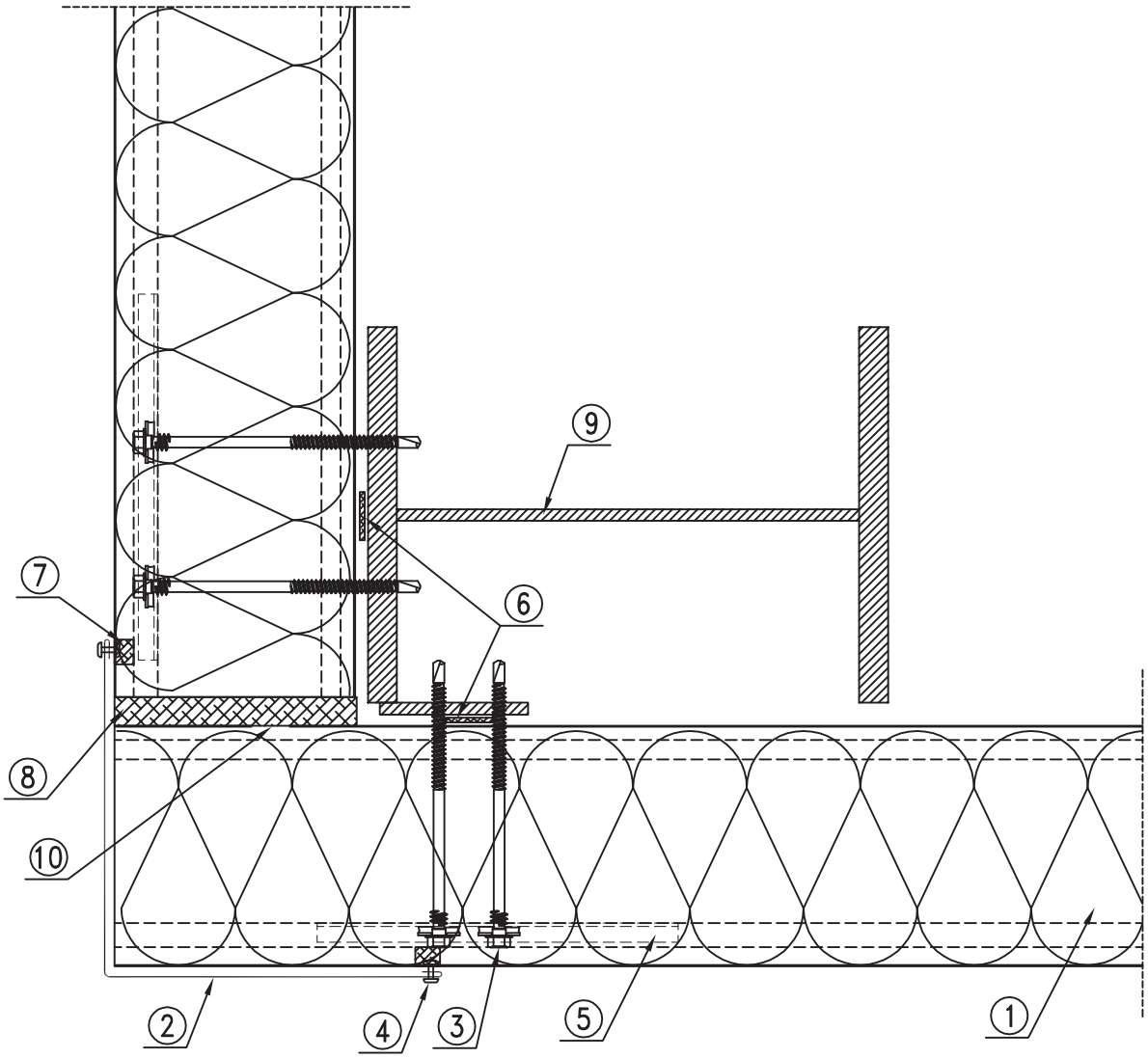

1. BALEXTHERM-MW-W-PLUS wall panel
2. OBR 105 or OBR109 flashing or individual flashing
3. LB 1- LB 5 fasteners for fastening BALEXTHERM panels
4. LB 6 self-drilling fastener or AL/Fe blind rivet every 300mm
5. LB 25 steel washer under fasteners
6. PES 3x20 self-adhesive sealing tape (recommended) or equivalent
7. Butyl sealing compound in the panel joint area
8. Mineral wool or polyurethane expansion gasket
9. Bearing column + flat bar acc. to the construction
10. Cladding with a 10mm wide gap (recommended to improve thermal insulation efficiency)

2.10. MW-W-PL09/1
Joining panels in the corner
- vertical arrangement of panels

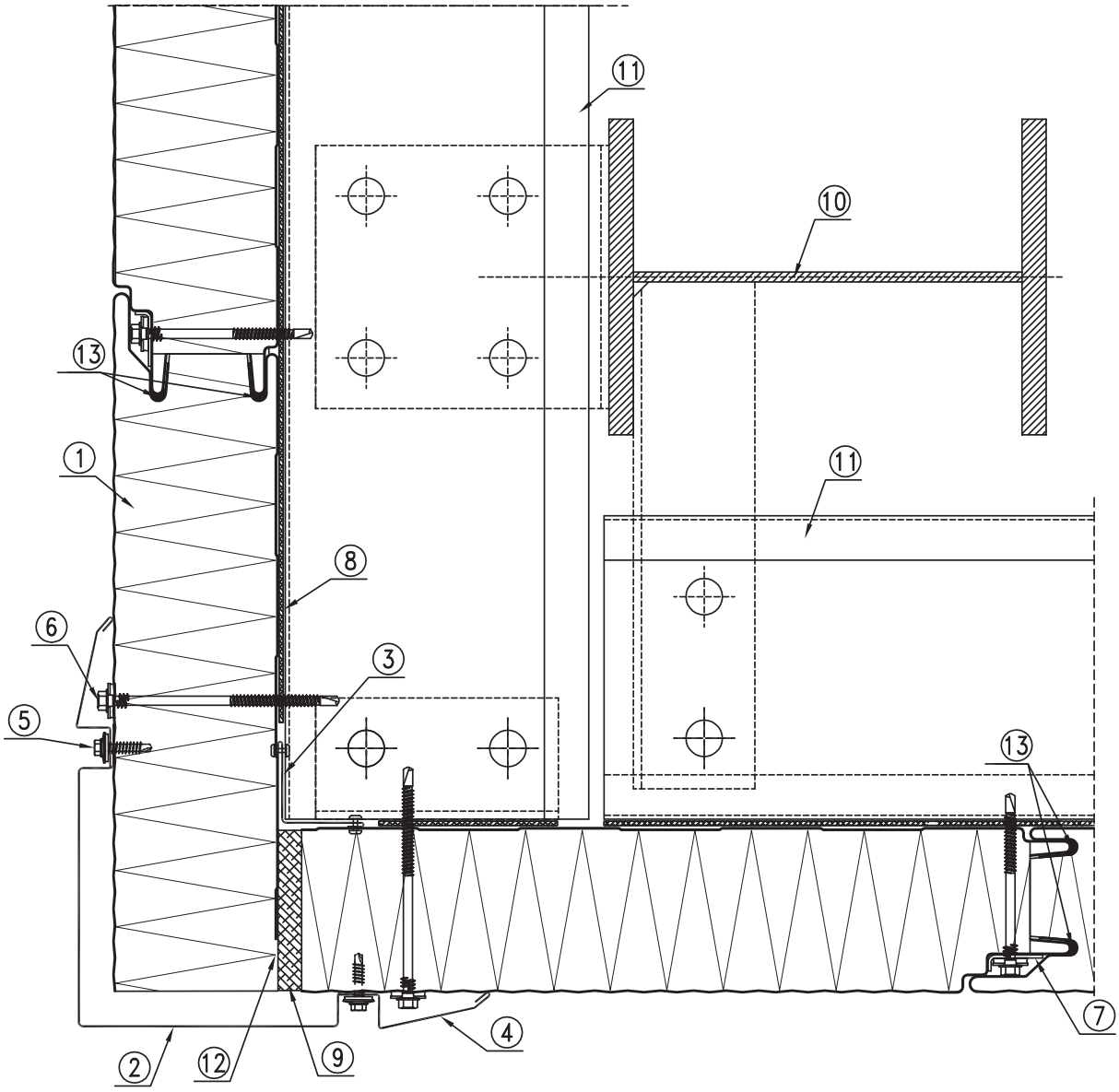

BALEXTHERM-MW-W-PLUS wall panel
2. OBR 113 flashing or individual flashing
3. OBR 104 flashing or individual flashing
4. OBR 111 flashing or individual flashing
5. LB 6 self-drilling fastener every 300mm
6. LB 1- LB 5 fasteners for fastening BALEXTHERM panels
7. LB 25 steel washer under fasteners
8. PES 3x20 self-adhesive sealing tape (recommended) or equivalent
9. Mineral wool or impregnated polyurethane expansion gasket
10. Bearing column acc. to the construction design
11. Transom acc. to the construction design
12. Cladding with a 10mm wide gap (recommended to improve thermal insulation efficiency)
13. Butyl sealing

2.11. MW-W-PL10
Joining panels lengthwise
- vertical arrangement of panels

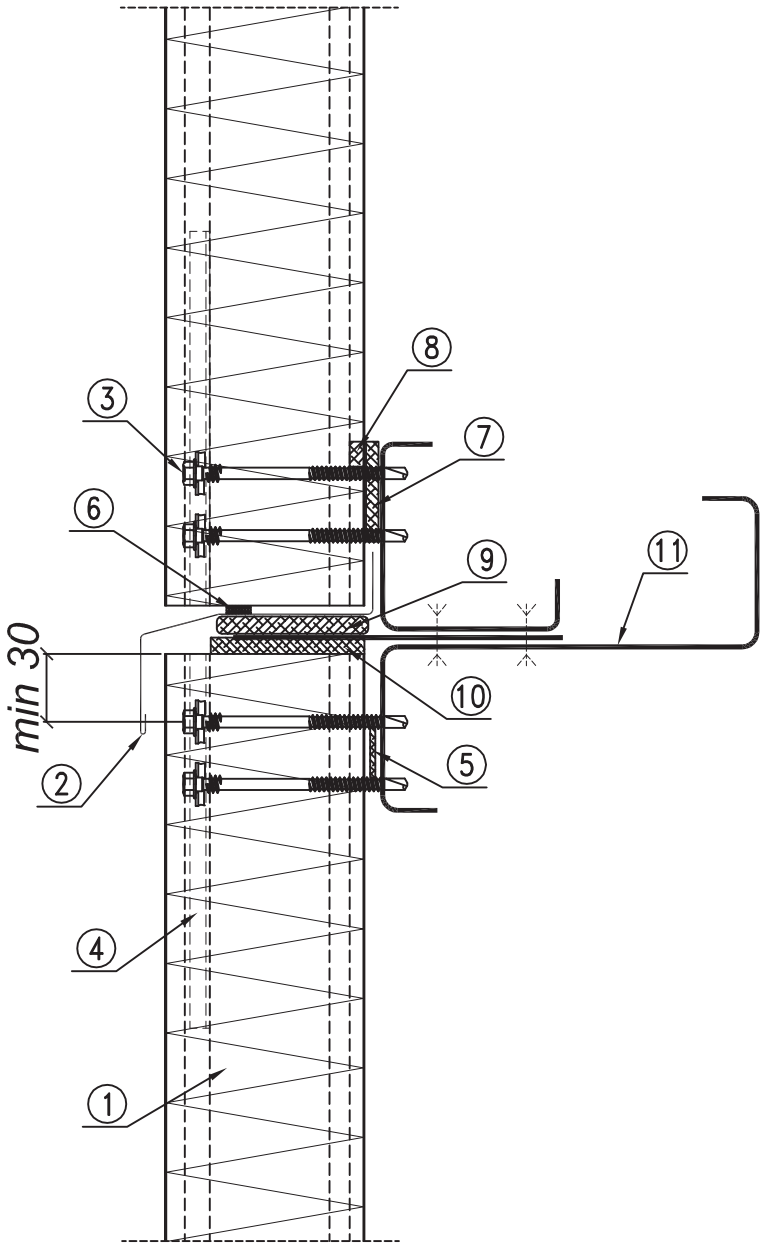

1. BALEXTHERM-MW-W-PLUS wall panel
2. OBR 100 flashing or individual flashing
3. LB 1- LB 5 fasteners for fastening BALEXTHERM panels
4. LB 25 steel washers under fasteners
5. PES 3x20 self-adhesive sealing tape (recommended) or equivalent
6. Butyl sealing tape (recommended)
7. PUS 5x40 self-adhesive sealing tape or equivalent
8. Sealing compound in the panel joint area
9. Impregnated polyurethane gasket 20mm thick or mineral wool
10. Sealing inserted during assembly
11. Cold bent or hot rolled, wooden, etc. steel transom + angle and flat bar acc. to the construction design

2.12. MW-W-PL11/1
Fastening panel to the end support
- horizontal arrangement of panels - option I

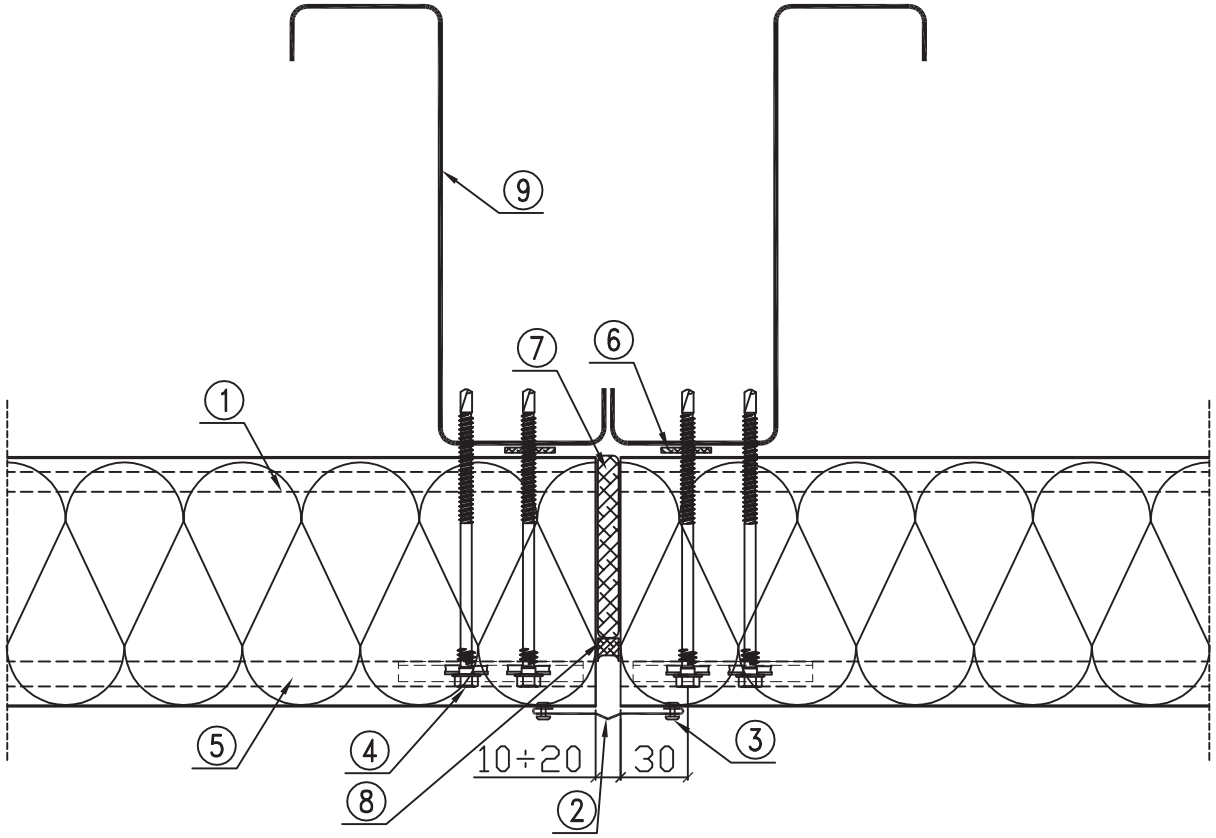

1. BALEXTHERM-MW-W-PLUS wall panel
2. OBR 106 flashing or individual flashing
3. LB 6 self-drilling fastener or AL/Fe blind rivet every 300mm
4. LB 1- LB 5 fasteners for fastening BALEXTHERM panels
5. LB 25 steel washer under fasteners
6. PES 3x20 self-adhesive sealing tape (recommended) or equivalent
7. Impregnated polyurethane expansion gasket or mineral wool
8. Impregnated polyurethane expansive tape 10x4 (20) or equivalent
9. Bearing column acc. to the construction design

2.13. MW-W-PL11/2
Fastening panel to the end support
- horizontal arrangement of panels - option II

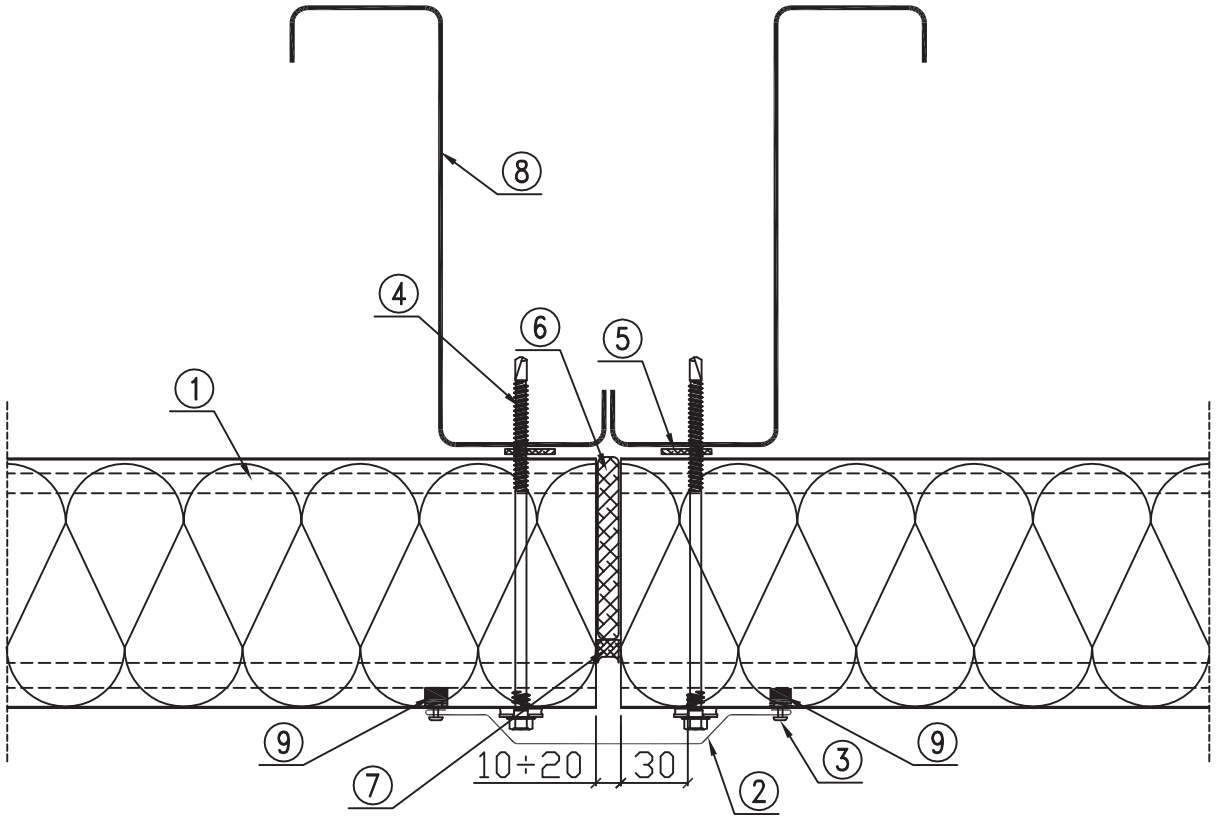

1. BALEXTHERM-MW-W-PLUS wall panel
2. OBR 105 flashing or individual flashing
3. LB 6 self-drilling fastener or AL/Fe blind rivet every 300mm
4. LB 1- LB 5 fasteners for fastening BALEXTHERM panels
5. PES 3x20 self-adhesive sealing tape (recommended) or equivalent
6. Impregnated polyurethane expansion gasket or mineral wool
7. Impregnated polyurethane expansive tape 10x4 (20) or equivalent
8. Bearing column acc. to the construction design
9. Butyl sealing compound in the joint under the flashing

2.14. MW-W-PL11/3
Fastening panel to the end support
- horizontal arrangement of panels - option III

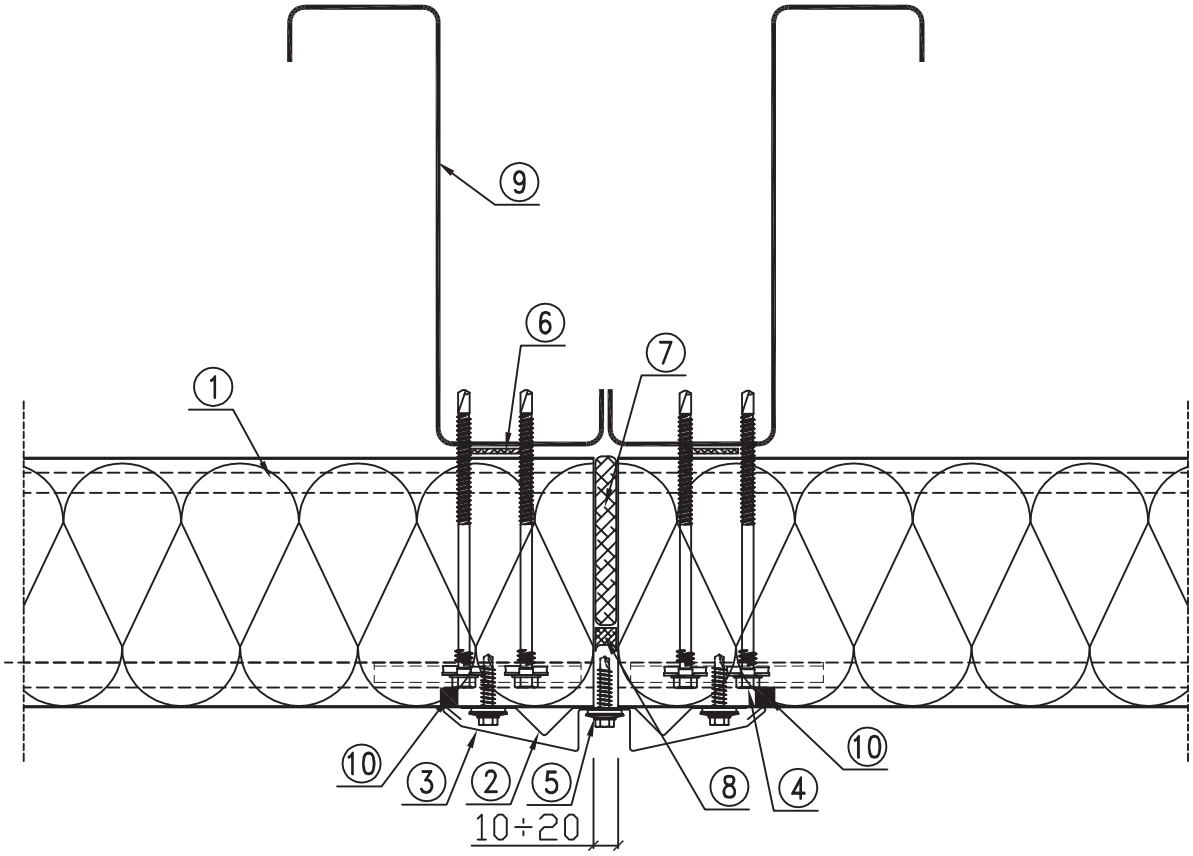

1. BALEXTHERM-MW-W-PLUS wall panel
2. OBR 110 flashing or individual flashing
3. OBR 111 flashing or individual flashing
4. LB 1- LB 5 fasteners for fastening BALEXTHERM panels
5. LB 6 self-drilling fastener every 300mm
6. PES 3x20 self-adhesive sealing tape (recommended) or equivalent
7. Impregnated polyurethane expansion gasket or mineral wool
8. Impregnated polyurethane expansive tape 10x4 (20) or equivalent
9. Bearing column acc. to the construction design
10. Butyl sealing compound in the joint under the flashing

2.15. MW-W-PL12
Fastening panel to the in-between support - horizontal arrangement of panels

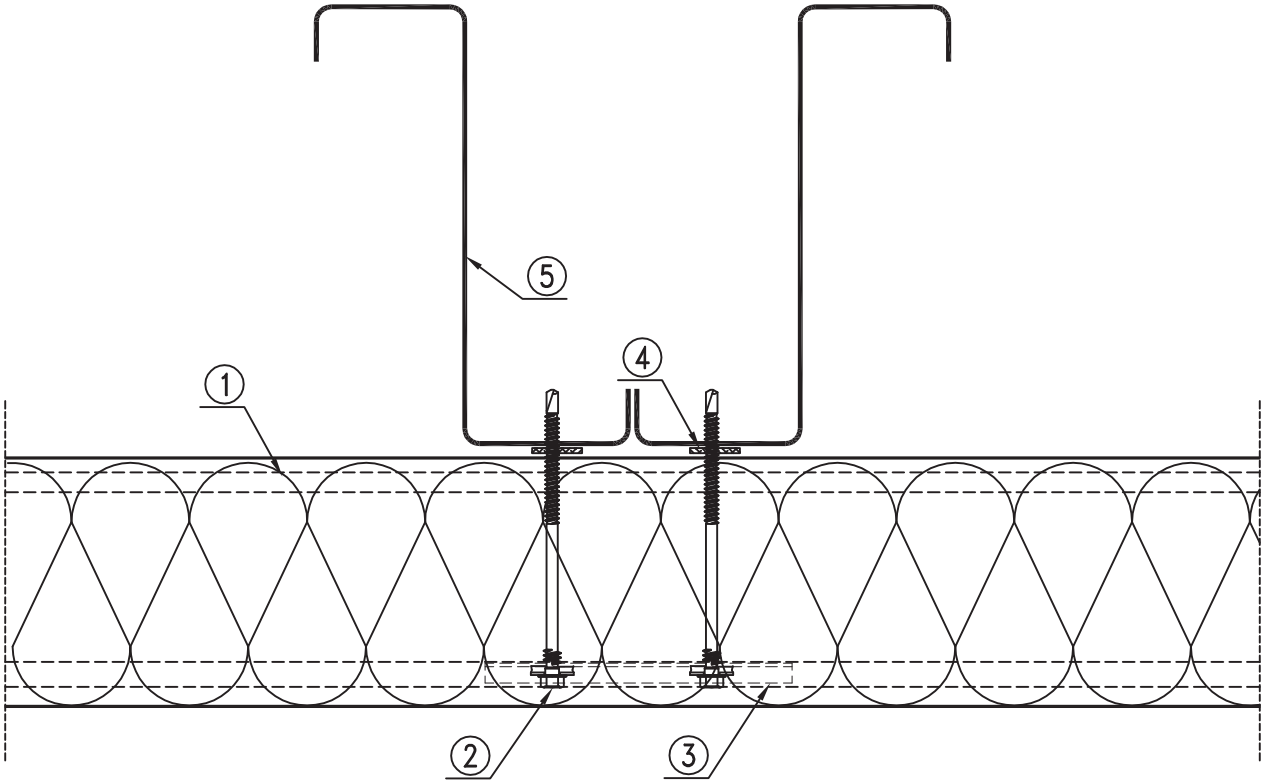

1. BALEXTHERM-MW-W-PLUS wall panel
2. LB 1- LB 5 fasteners for fastening BALEXTHERM panels
3. LB 25 steel washer under fasteners
4. PES 3x20 self-adhesive sealing tape (recommended) or equivalent
5. Bearing column acc. to the construction design

2.16. MW-W-PL13
Joining panels with window strip
- vertical arrangement of panels - option I

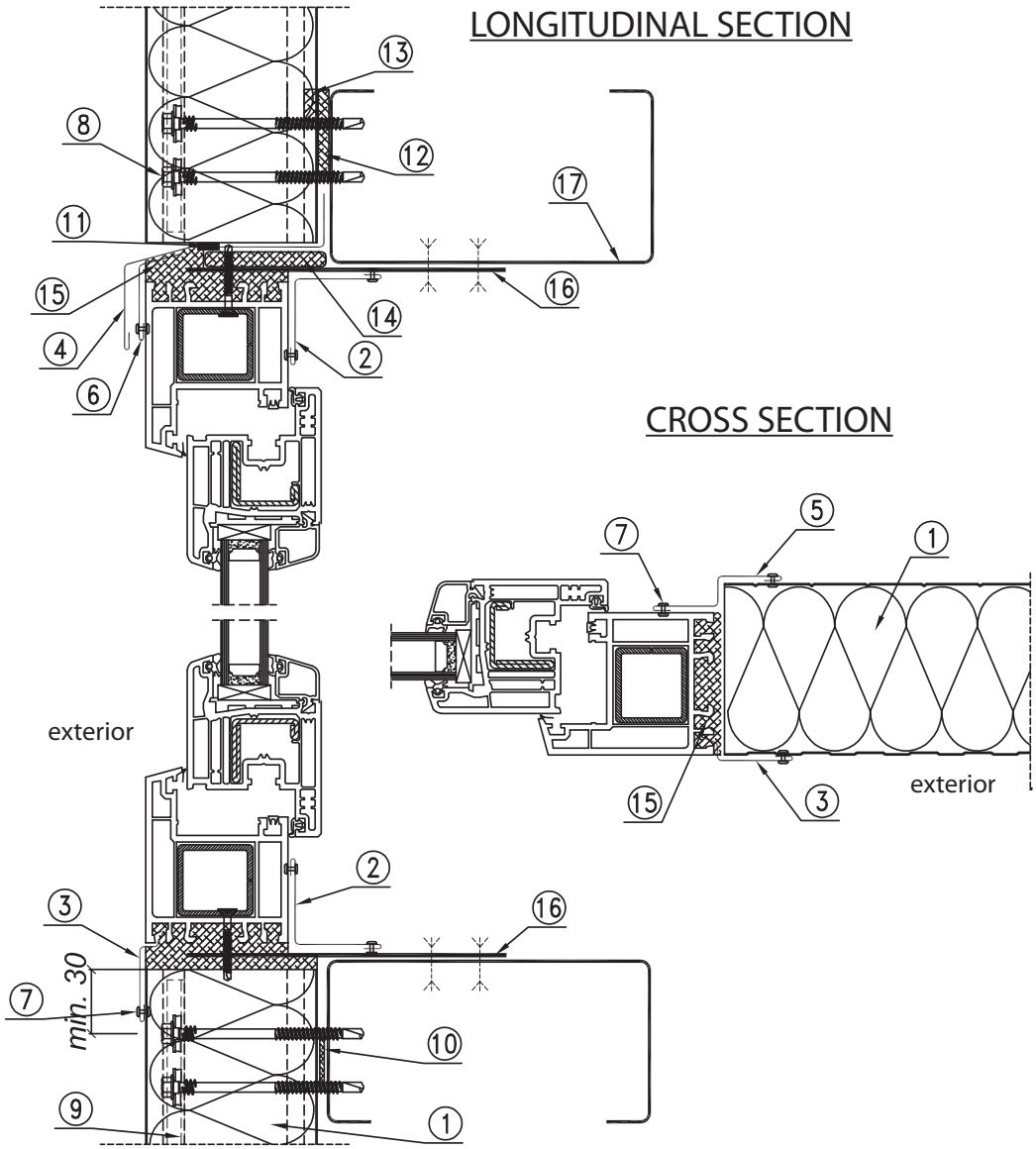

1. BALEXTHERM-MW-W-PLUS wall panel
2. OBR 104 flashing or individual flashing
3. OBR 106 flashing or individual flashing
4. OBR 100 flashing or individual flashing
5. Individual flashing
6. Individual flashing
7. LB 6 self-drilling fastener or AL/Fe blind rivet every 300mm
8. LB 1- LB 5 fasteners for fastening BALEXTHERM panels
9. LB 25 steel washer under fasteners
10. PES 3x20 self-adhesive sealing tape (recommended) or equivalent
11. Butyl sealing tape (recommended)
12. PUS 5x40 self-adhesive sealing tape or equivalent
13. Sealing compound in the panel joint area
14. Impregnated polyurethane gasket 10mm thick or equivalent
15. Mineral wool
16. Flat bar for fastening a window
17. Bearing lock acc. to the construction design

2.17. MW-W-PL14
Joining panels with window strip
- vertical arrangement of panels - option II

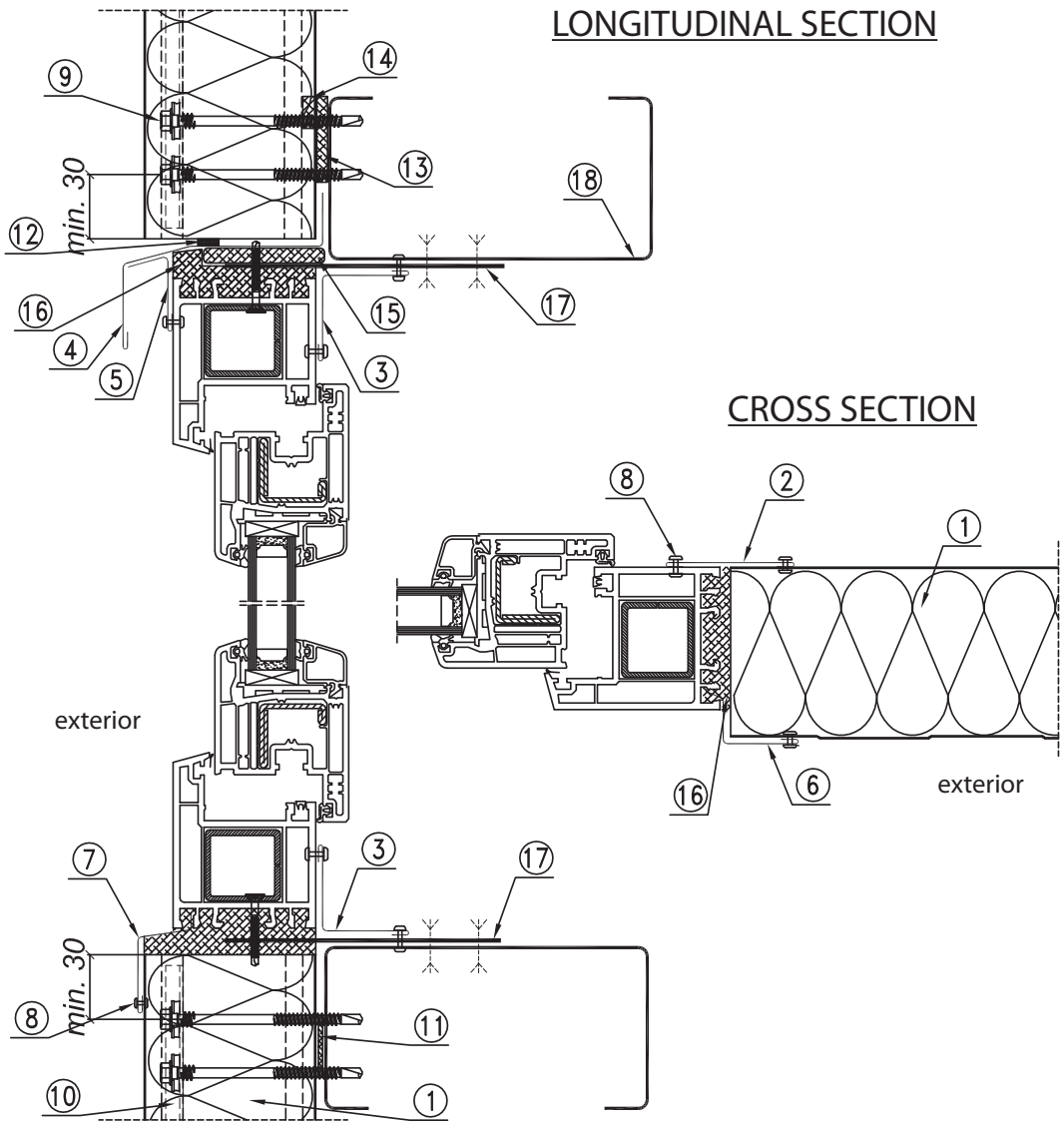

1. BALEXTHERM-MW-W-PLUS wall panel
2. OBR 106 flashing or individual flashing
3. OBR 104 flashing or individual flashing
4. OBR 100 flashing or individual flashing
5. Individual flashing
6. Individual flashing
7. Individual flashing
8. Self-drilling fastener or AL/Fe blind rivet every 300mm
9. LB 1- LB 5 fasteners for fastening BALEXTHERM panels
10. LB 25 steel washer under fasteners
11. PES 3x20 self-adhesive sealing tape (recommended) or equivalent
12. Butyl sealing tape (recommended)
13. PUS 5x40 self-adhesive sealing tape or equivalent
14. Sealing compound in the panel joint area
15. Impregnated polyurethane gasket 10mm thick or assembly foam
16. Mineral wool
17. Flat bar for fastening a window
18. Bearing lock acc. to the construction design

2.18. MW-W-PL15
Joining panels with window strip
- vertical arrangement of panels - option III

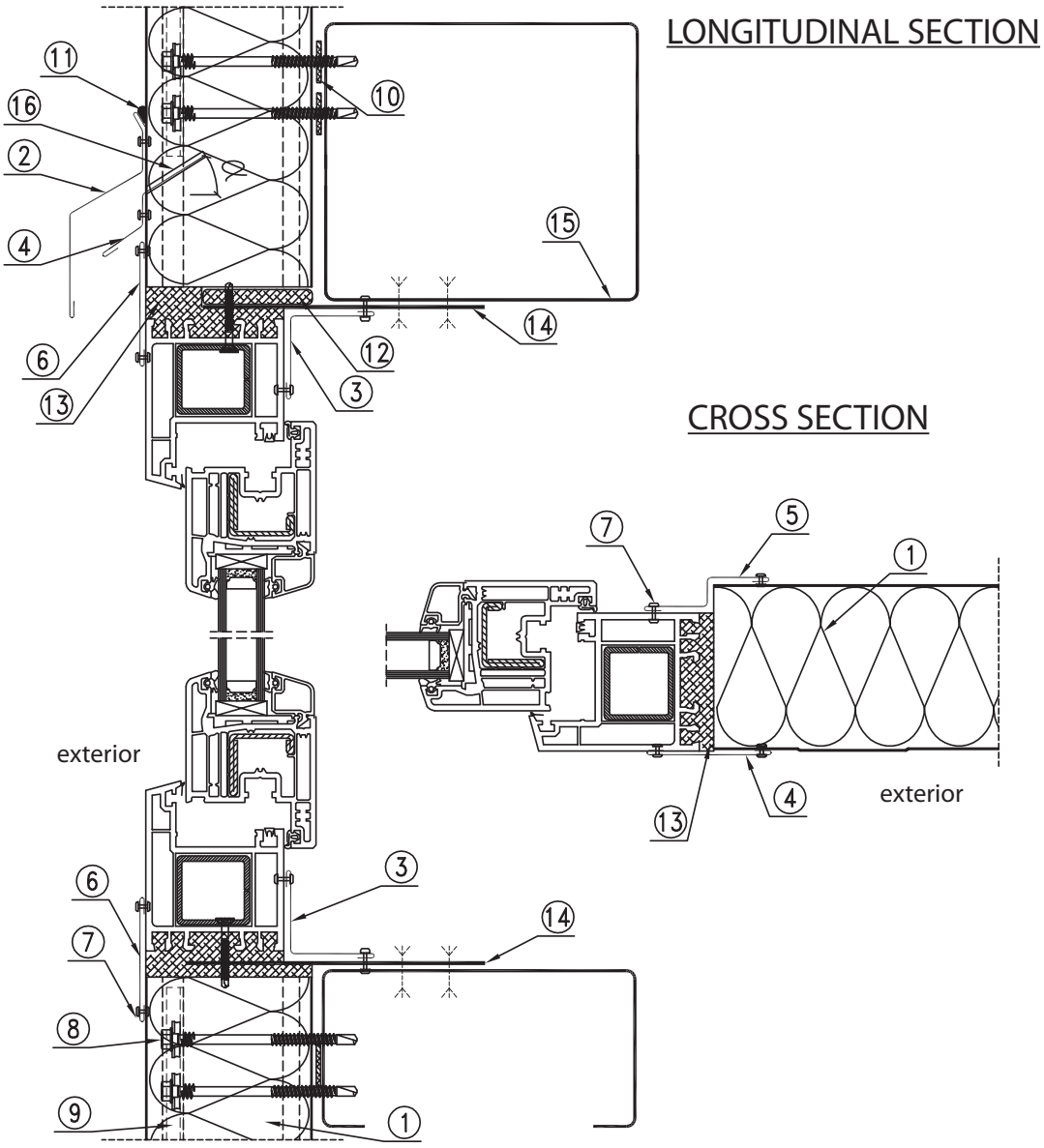

1. BALEXTHERM-MW-W-PLUS wall panel
2. OBR 107 flashing or individual flashing
3. OBR 104 flashing or individual flashing
4. Individual flashing
5. Individual flashing
6. Individual flashing
7. LB 6 self-drilling fastener or AL/Fe blind rivet every 300mm
8. LB 1- LB 5 fasteners for fastening BALEXTHERM panels
9. LB25 steel washer under fasteners
10. PES 3x20 self-adhesive sealing tape (recommended) or equivalent
11. Butyl sealing compound
12. Impregnated polyurethane gasket 10mm thick or equivalent
13. Mineral wool
14. Flat bar for fastening a window
15. Bearing lock acc. to the construction design
16. Groove in the panel joint area at OBR110 α=35°-45°

2.19. MW-W-PL16/1
Joining panels with PVC windows
- vertical or horizontal arrangement of panels

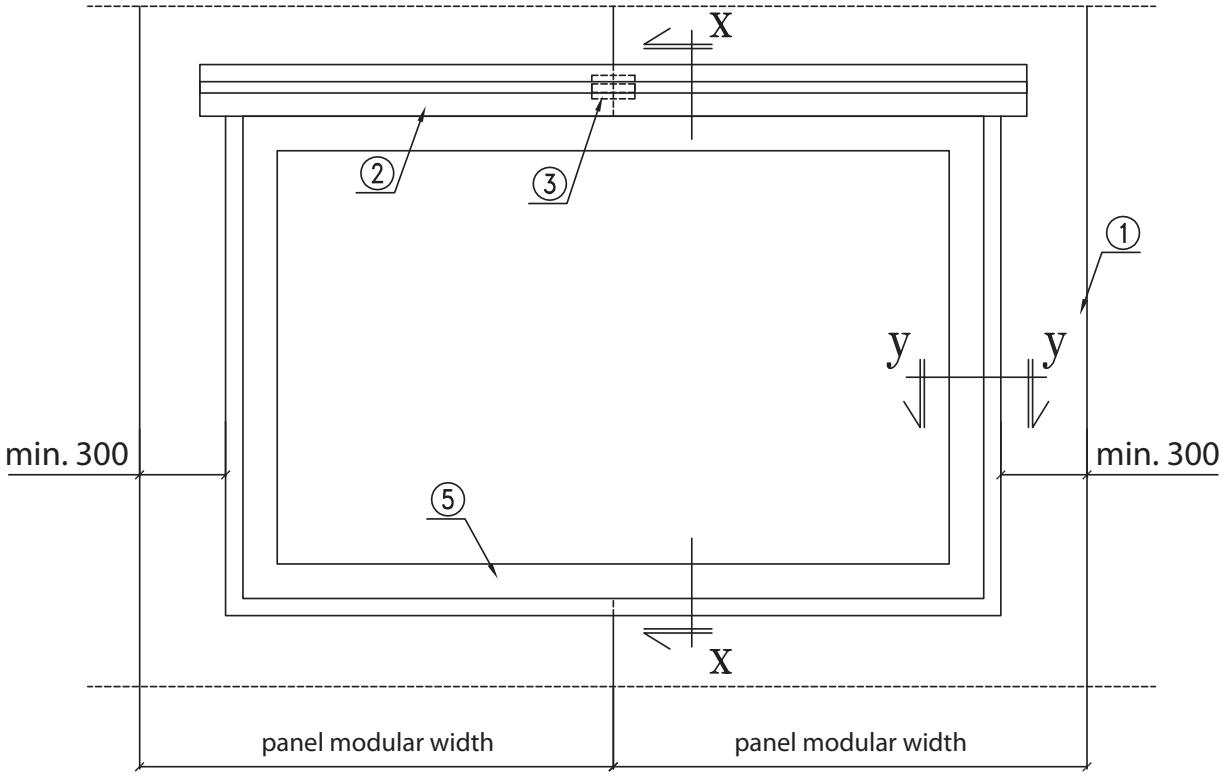

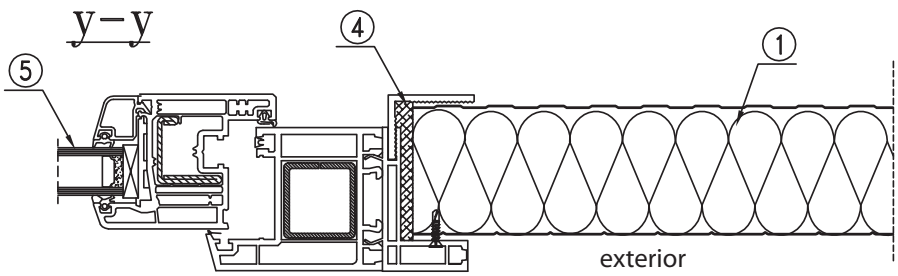

1. BALEXTHERM-MW-W-PLUS wall panel
2. OBR 107 or individual flashing
3. OBR 108 flashing (in the panel joint area – for the vertical arrangement of panels only) or individual flashing
4. Polyurethane gasket or mineral wool
5. PVC window

2.20. MW-W-PL16/2
Joining panels with PVC windows
- vertical or horizontal arrangement of panels

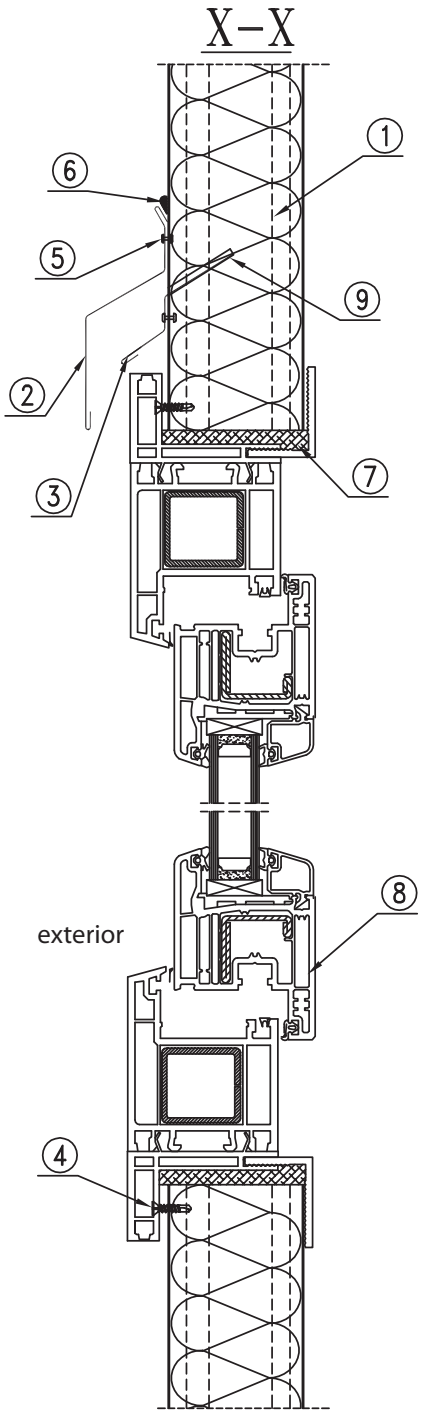

1. BALEXTHERM-MW-W-PLUS wall panel
2. OBR 107 or individual flashing
3. Individual flashing (in the panel joint area – for the vertical arrangement of panels only)
4. Self-drilling fastener for fastening a window every 300mm
5. LB 6 self-drilling fastener or AL/Fe blind rivet every 300mm
6. Sealing compound
7. Polyurethane gasket or mineral wool
8. PVC window
9. Groove in the panel joint area (for the vertical arrangement of panels only)

2.21. MW-W-PL17/1
Fastening panel - sliding joint
- vertical arrangement of panels

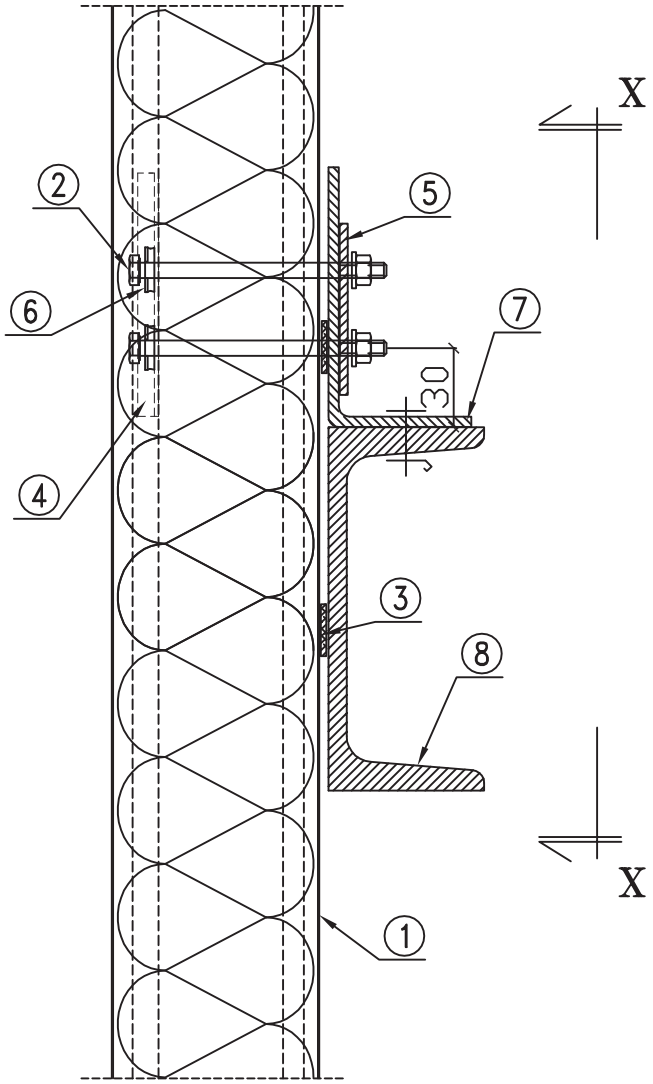

1. BALEXTHERM-MW-W-PLUS wall panel
2. M 6 screw with a self-locking nut
3. PES 3x20 self-adhesive sealing tape (recommended)
4. System steel washer LB25
5. Steel washer - individual
6. Washer with cured EPDM (recommended T19/3/6,7 by SFS) or equivalent
7. Angle acc. to the construction design
8. Transom acc. to the construction design

2.22. MW-W-PL17/2
Fastening panel - sliding joint
- vertical arrangement of panels - X-X section

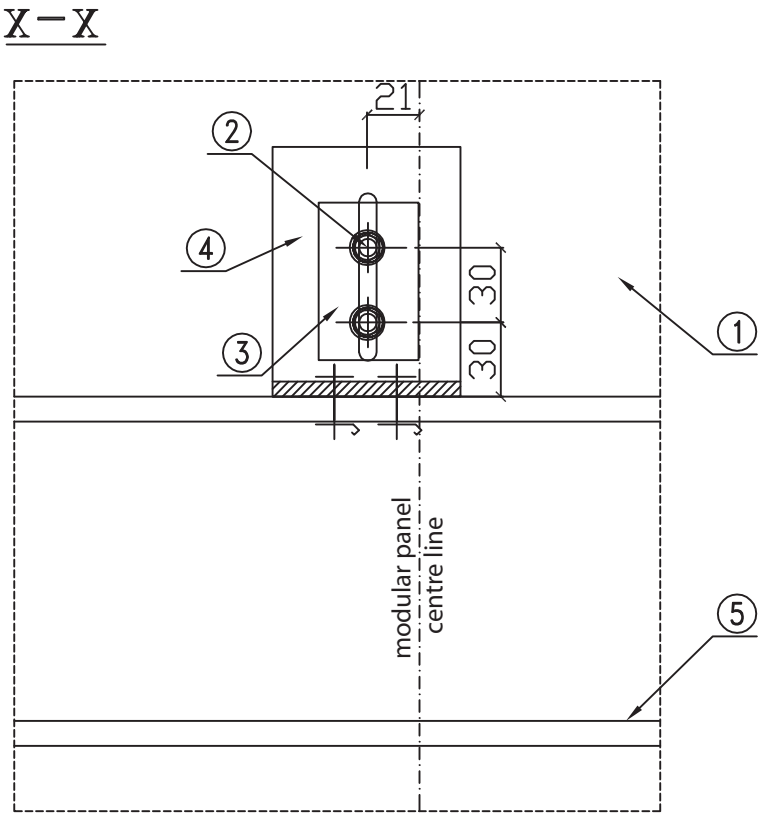

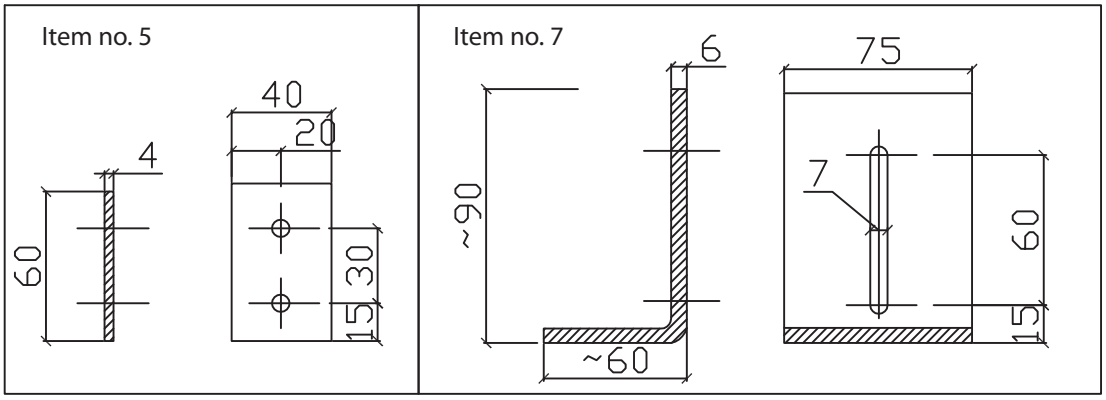

1. BALEXTHERM-MW-W-PLUS wall panel
2. M 6 screw with a self-locking nut
3. Steel washer - individual
4. Angle acc. to the construction design
5. Transom acc. to the construction design

3. BALEXTHERM-MW-R ROOF PANELS

3.1. MW-R01
BALEXTHERM-MW-R roof panels - joint, profile type

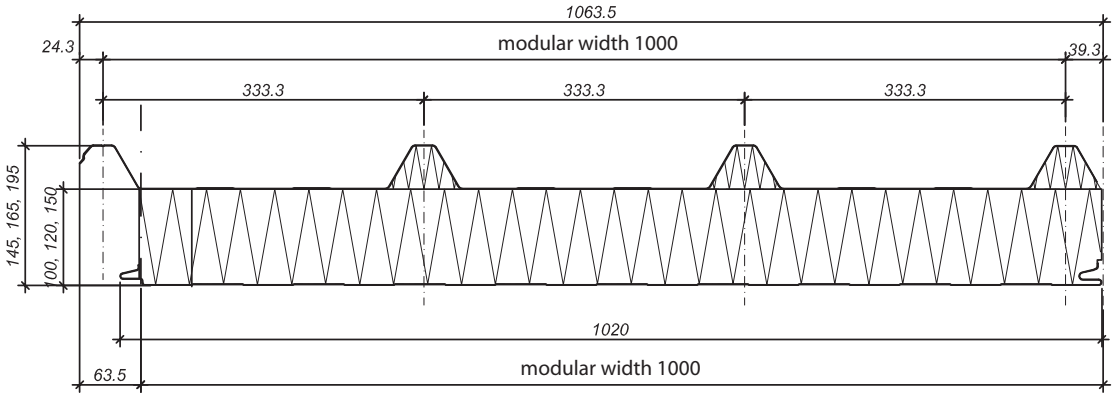

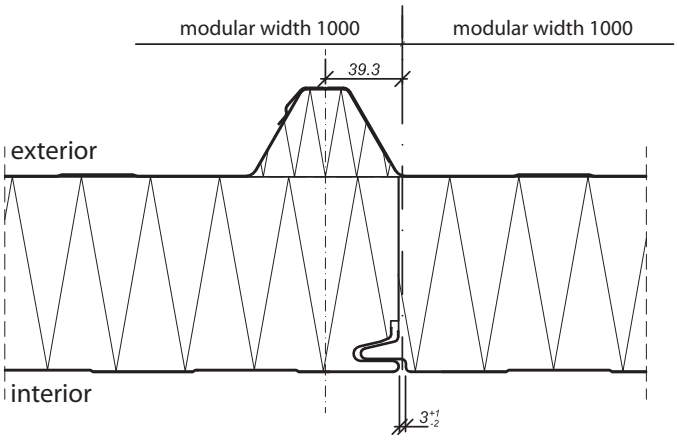

EXTERNAL FACINGS:

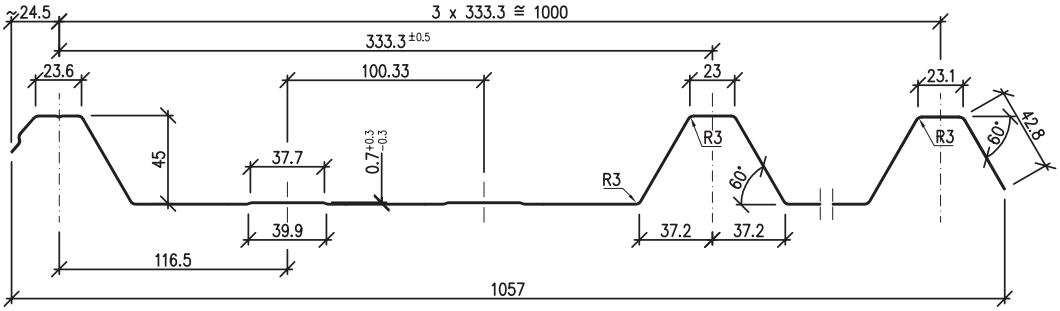

INTERNAL FACINGS:

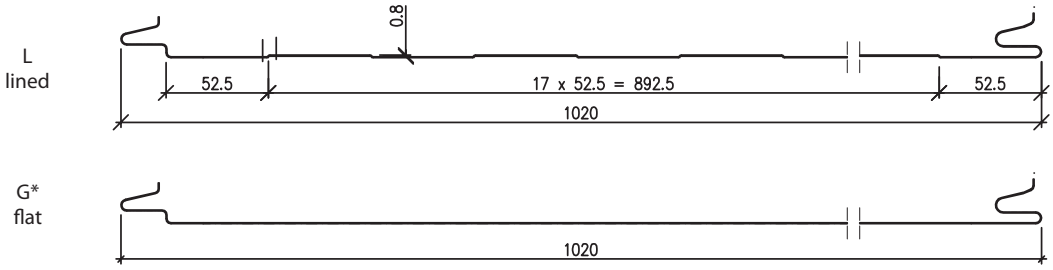

* flat for facings from 0,50 mm thickness

3.2. MW-R02/1
Fastening panel to a steel purlin

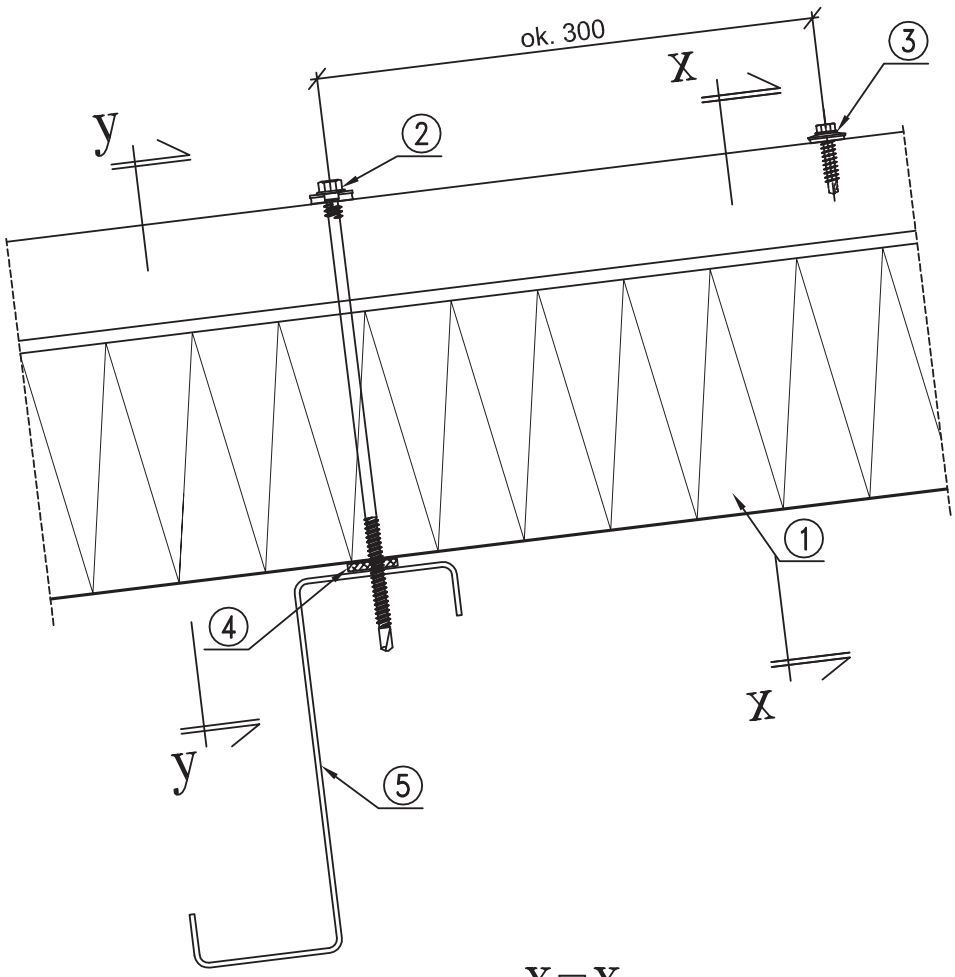

x−x

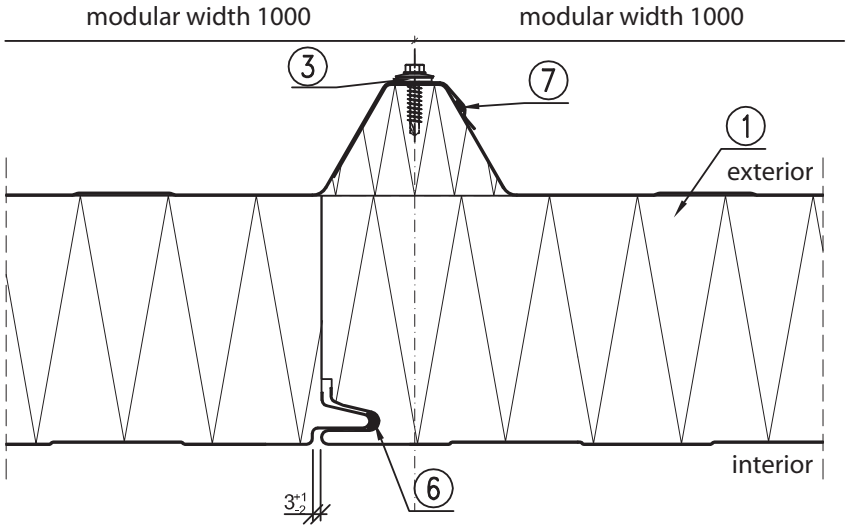

1. BALEXTHERM-MW-R roof panel
2. Connector fixing the panel to LB1 - LB5 purlins
3. LB6 self-drilling connector or AL/Fe tight blind rivet approx. every 430 mm
4. PES 3x20 adhesive sealing tape (recommended) or equivalent
5. Cold bent, hot rolled, wooden etc. steel bearing purlin acc. to the construction design
6. Sealing compound (butyl is recommended) applied on site or gasket applied during production
6. Butyl mass or tape

3.3. MW-R02/2
Fastening panel to a steel purlin - Y-Y section

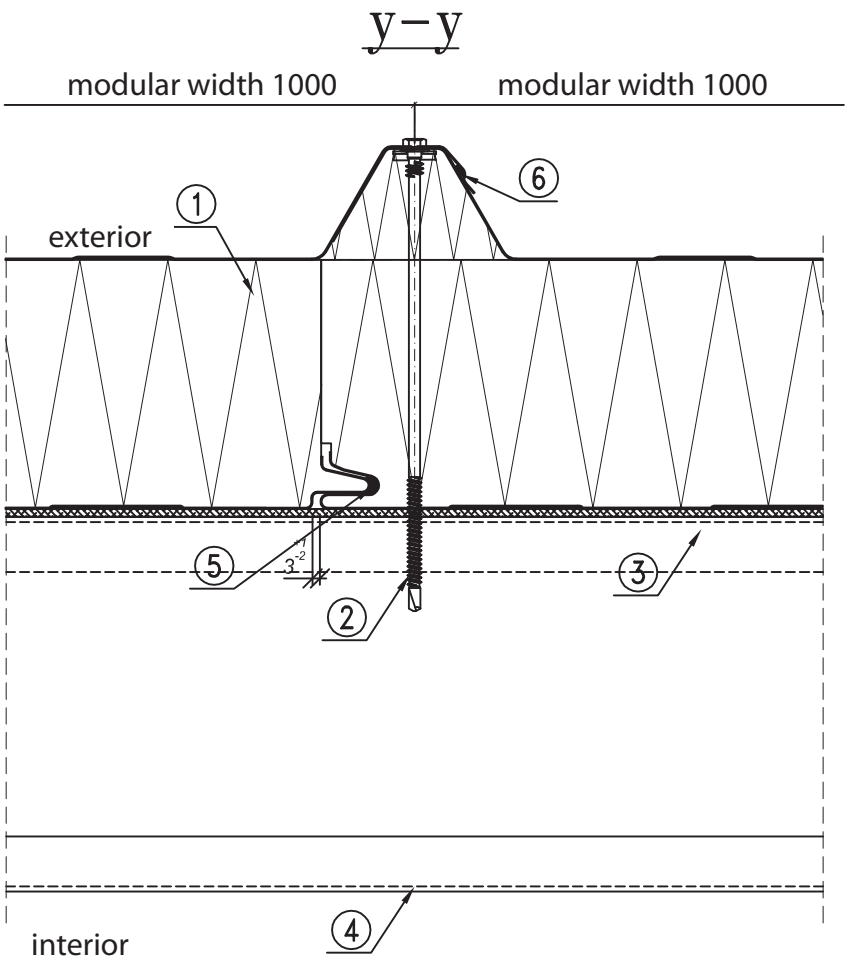

1. BALEXTHERM-MW-R roof panel
2. Connector fixing the panel to LB1 - LB5 purlins
3. PES 3x20 adhesive sealing tape (recommended) or equivalent
4. Cold bent, hot rolled, wooden etc. steel purlin acc. to the construction design
5. Butyl mass or tape
6. Sealing compound (butyl is recommended) applied on site or gasket applied during production

3.4. MW-R03
Panel ending for a monopitch roof

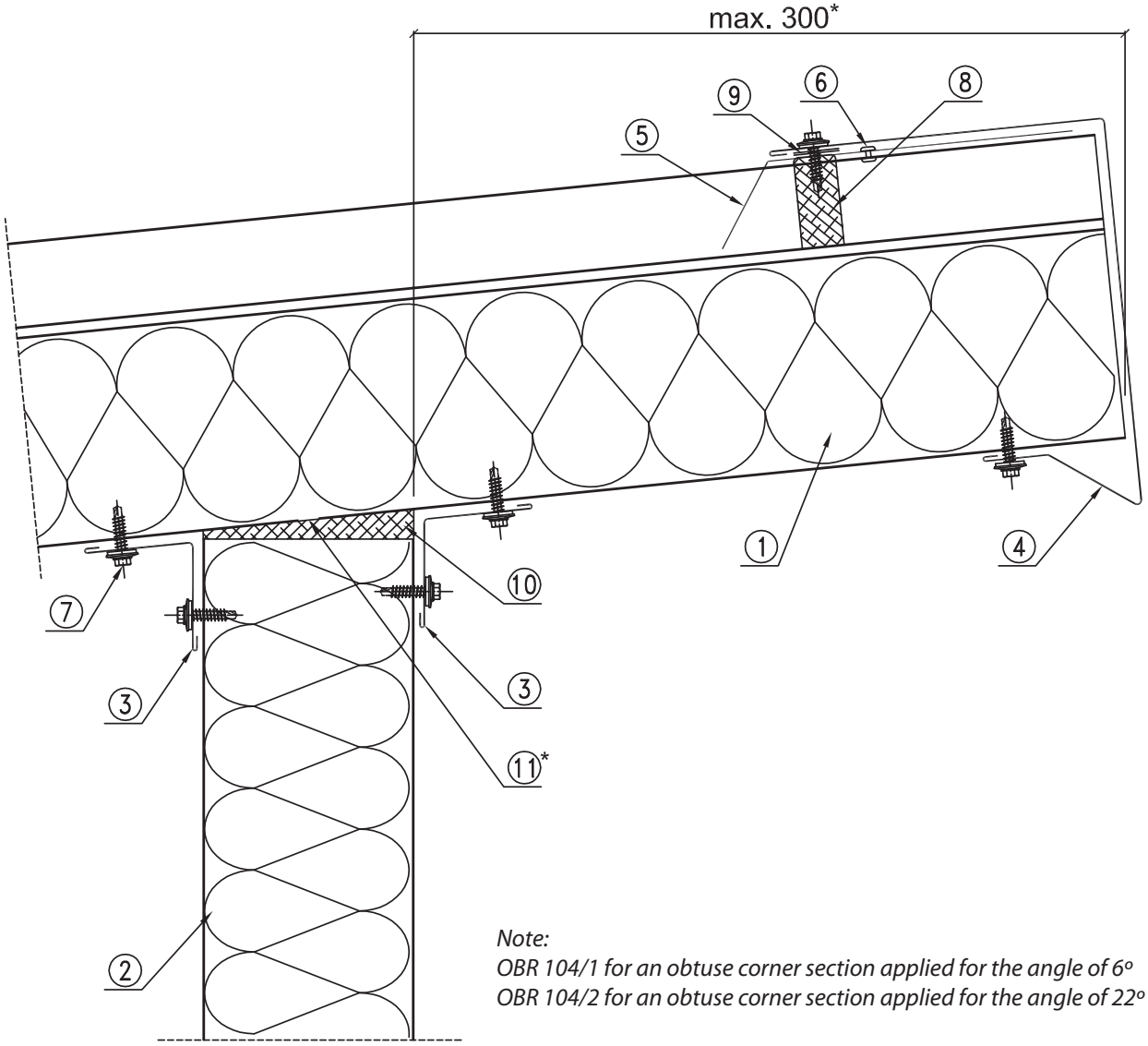

Note:
OBR 104/1 for an obtuse corner section applied for the angle of 6º
OBR 104/2 for an obtuse corner section applied for the angle of 22º

1. BALEXTHERM-MW-R roof panel
2. BALEXTHERM-MW-W-ST or BALEXTHERM-MW-W-PLUS wall panel
3. OBR 104 flashing or individual flashing
4. OBR 200 flashing or individual flashing
5. OBR 210 flashing or individual flashing
6. AL/Fe assembly blind rivet between sinusoid tops every 1000mm
7. LB 1 self-drilling fastener or AL/Fe blind rivet every 300mm (a tight rivet on the external roof cladding)
8. TUN 45 sealing tape
9. Butyl sealing tape
10. Mineral wool sealing applied during assembly
11. Cladding with a 10mm wide gap (throat distance of the support max 300mm)
    *recommended to improve thermal insulation efficiency

3.5. MW-R04/1
Gable-end roof edge

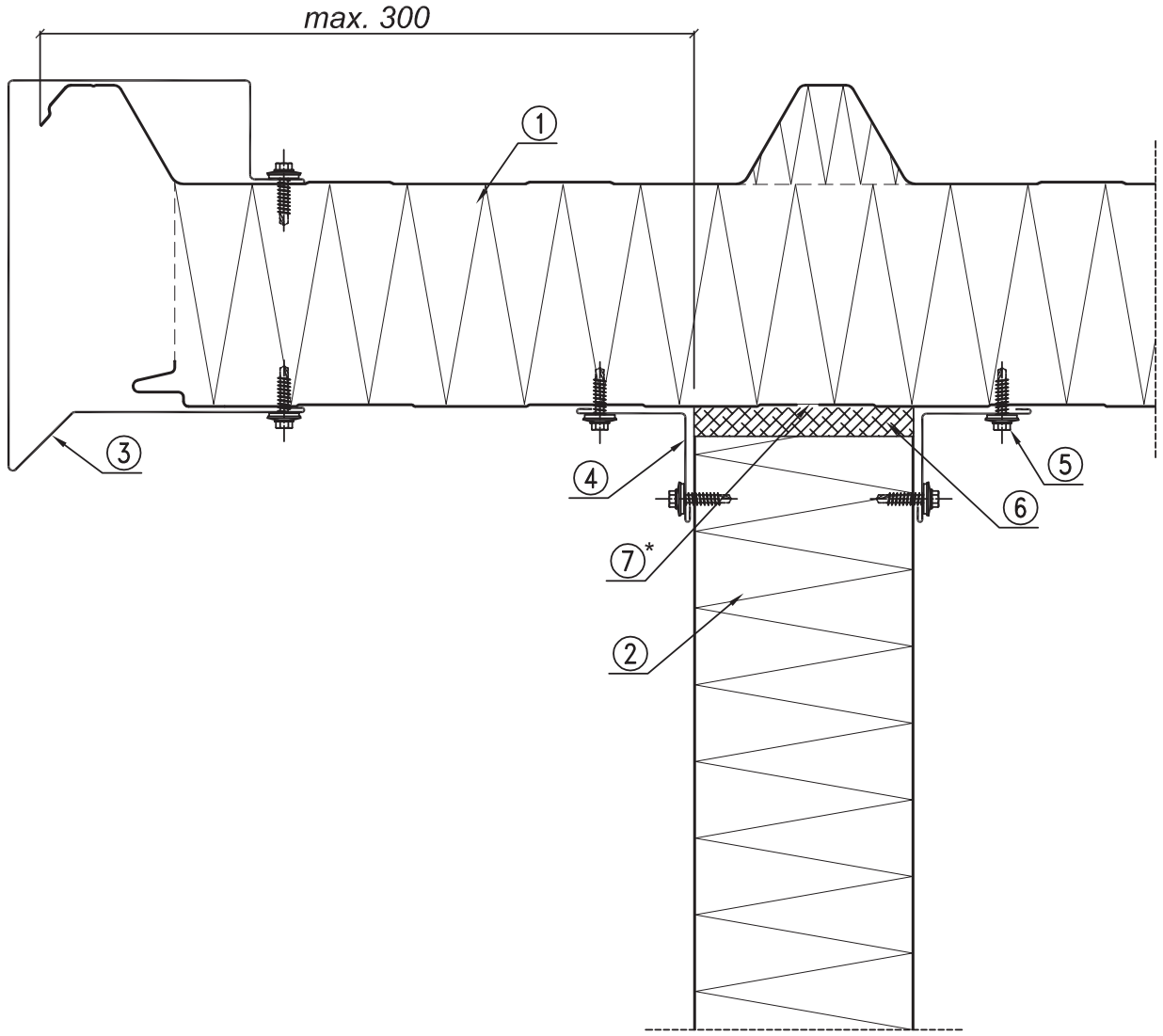

1. BALEXTHERM-MW-R roof panel
2. BALEXTHERM-MW-W-PLUS or BALEXTHERM-MW-W-ST wall panel
3. OBR 202 flashing or individual flashing
4. OBR 104 flashing or individual flashing
5. LB 6 self-drilling fastener or AL/Fe blind rivet every 300mm (a tight rivet on the external roof cladding)
6. Mineral wool sealing applied during assembly
7. Cladding with a 10mm wide gap, recommended to improve thermal insulation efficiency
(throat distance of the support max 300mm)

3.6. MW-R04/2
Gable-end roof edge

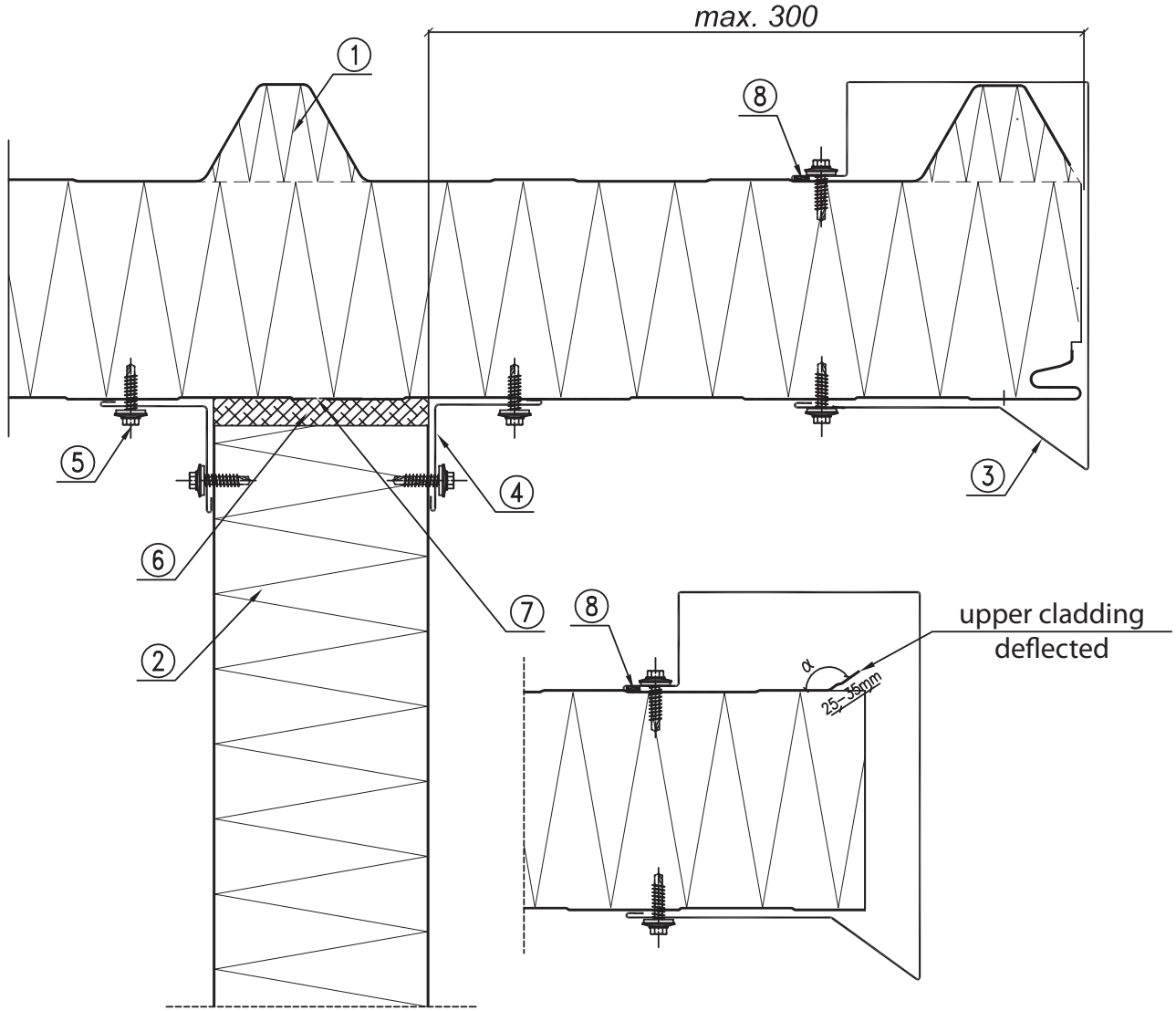

1. BALEXTHERM-MW-R roof panel
2. BALEXTHERM-MW-W-PLUS or BALEXTHERM-MW-W-ST wall panel
3. OBR 202 flashing or individual flashing
4. OBR 104 flashing or individual flashing
5. LB 6 self-drilling fastener or AL/Fe blind rivet every 300mm (a tight rivet on the external roof cladding)
6. Mineral wool sealing applied during assembly
7. Facing with a 10mm wide gap, recommended to improve thermal insulation efficiency
(throat distance of the support max 300mm)
8. Butyl mass - recommended

3.7. MW-R05
Joint of panels with a wall panel by the attic

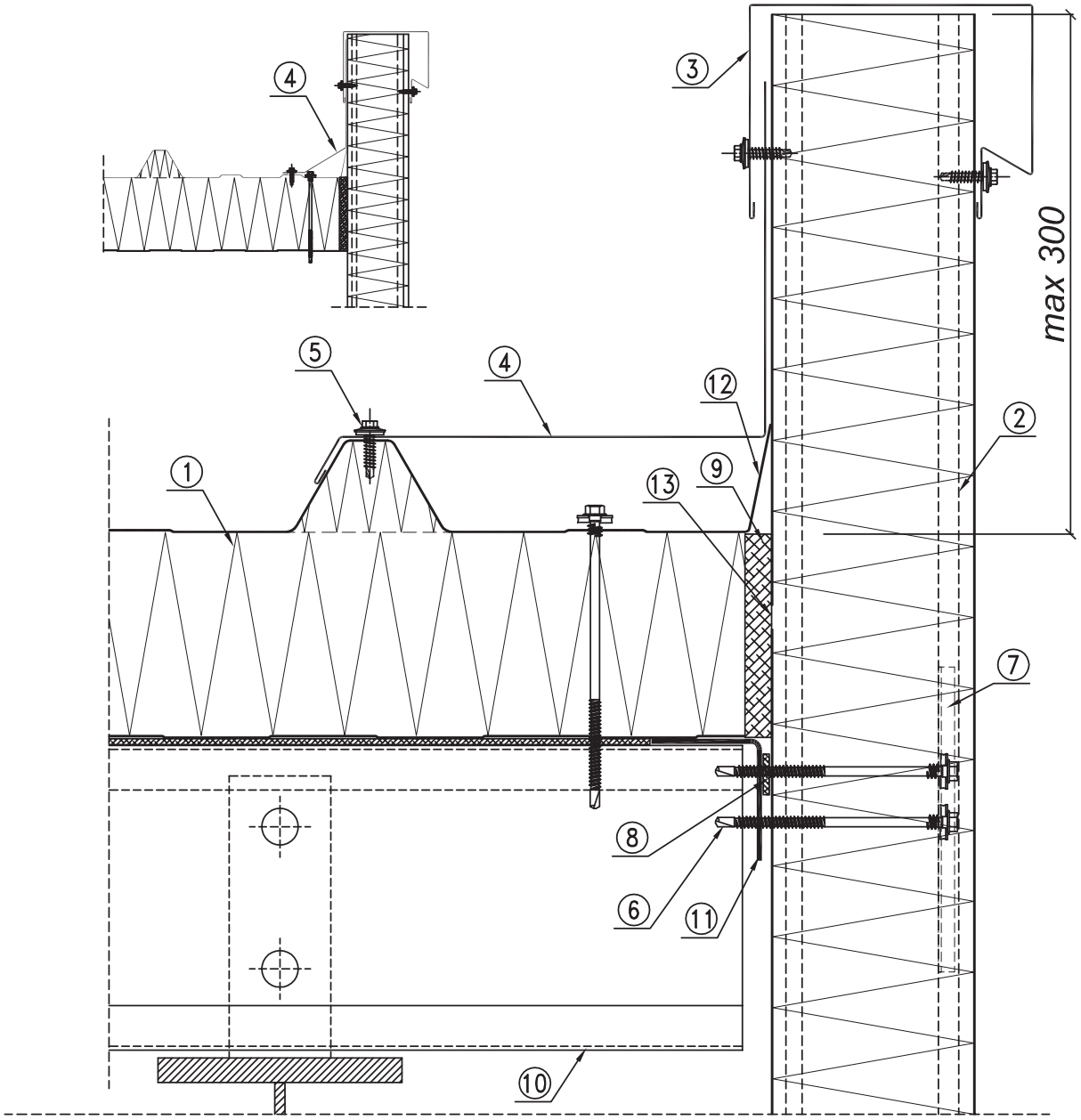

1. BALEXTHERM-MW-R roof panel
2. BALEXTHERM-MW-W-PLUS or BALEXTHERM-PU-W-ST wall panel
3. OBR 112 flashing or individual flashing
4. Individual flashing
5. LB 6 self-drilling fastener or AL/Fe blind rivet every 300mm (a tight rivet on the external roof cladding)
6. LB 1- LB 5 fasteners for fastening BALEXTHERM panels
7. LB 25 steel washer under fasteners
8. PES 3x20 self-adhesive sealing tape (recommended) or equivalent
9. Mineral wool sealing applied during assembly
10. Purlin acc. to the construction design
11. Angle fastened to a purlin acc. to the construction design
12. Deflected upper cladding
13. Facing with a 10mm wide gap, to improve thermal insulation efficiency
(throat distance of the support max 300mm)

3.8. MW-R06
Joint of panels at the roof ridge

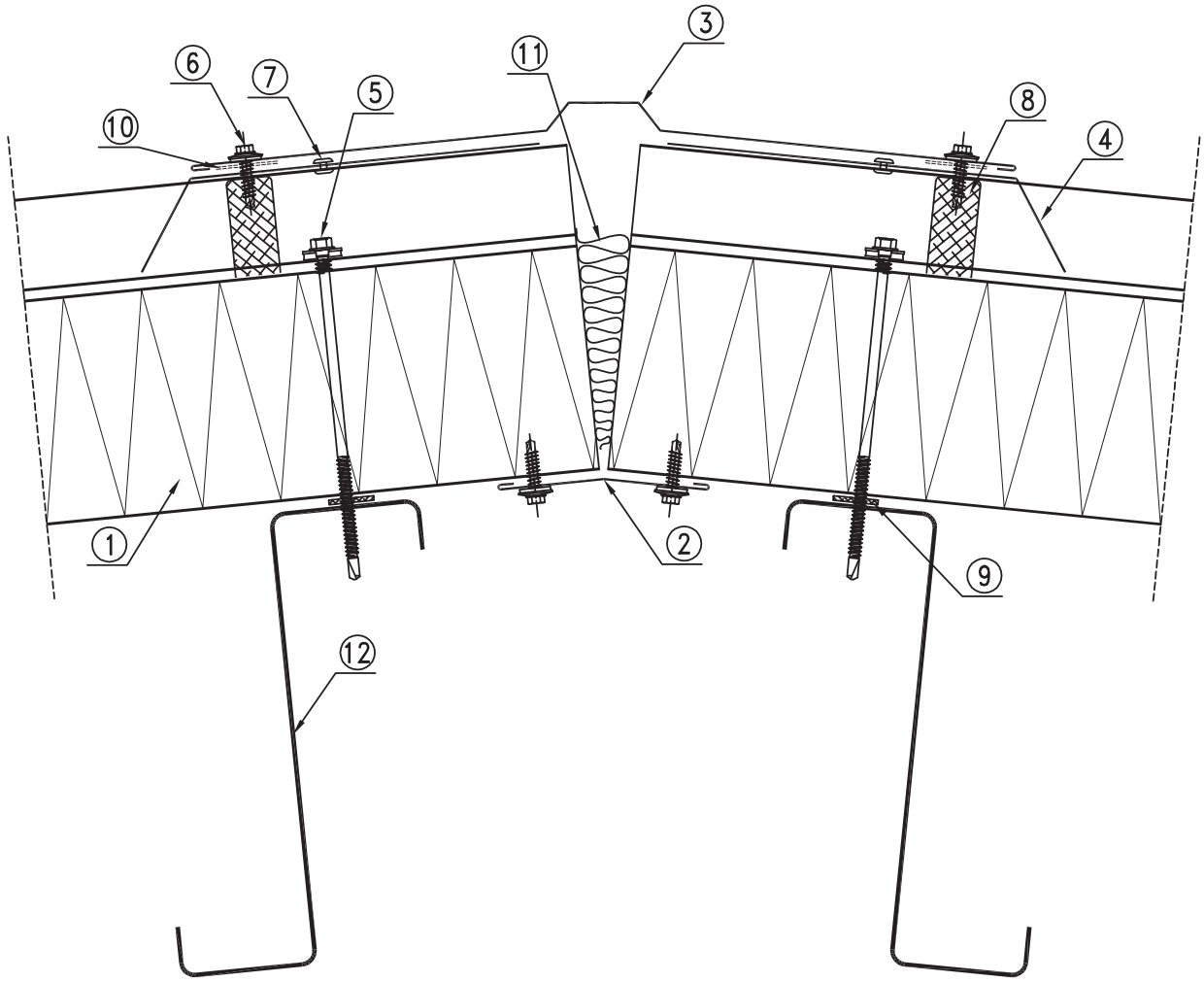

1. BALEXTHERM-MW-R roof panel
2. OBR 104 flashing or individual flashing
3. OBR 52 or OBR 205 flashing or individual flashing
4. OBR 201 flashing or individual flashing
5. LB 1- LB 5 fasteners for fastening BALEXTHERM panels
6. LB 6 self-drilling fastener or AL/Fe blind rivet every 300mm (a tight rivet on the external roof cladding)
7. AL/Fe assembly blind rivet every 1000mm
8. TUN 45 sealing tape
9. PES 3x20 self-adhesive sealing tape (recommended) or equivalent
10. Butyl sealing tape
11. Mineral wool sealing applied during assembly
12. Cold bent, hot rolled, wooden etc. steel purlin acc. to the construction design

3.9. MW-R07
Joint of panels with an internal gutter

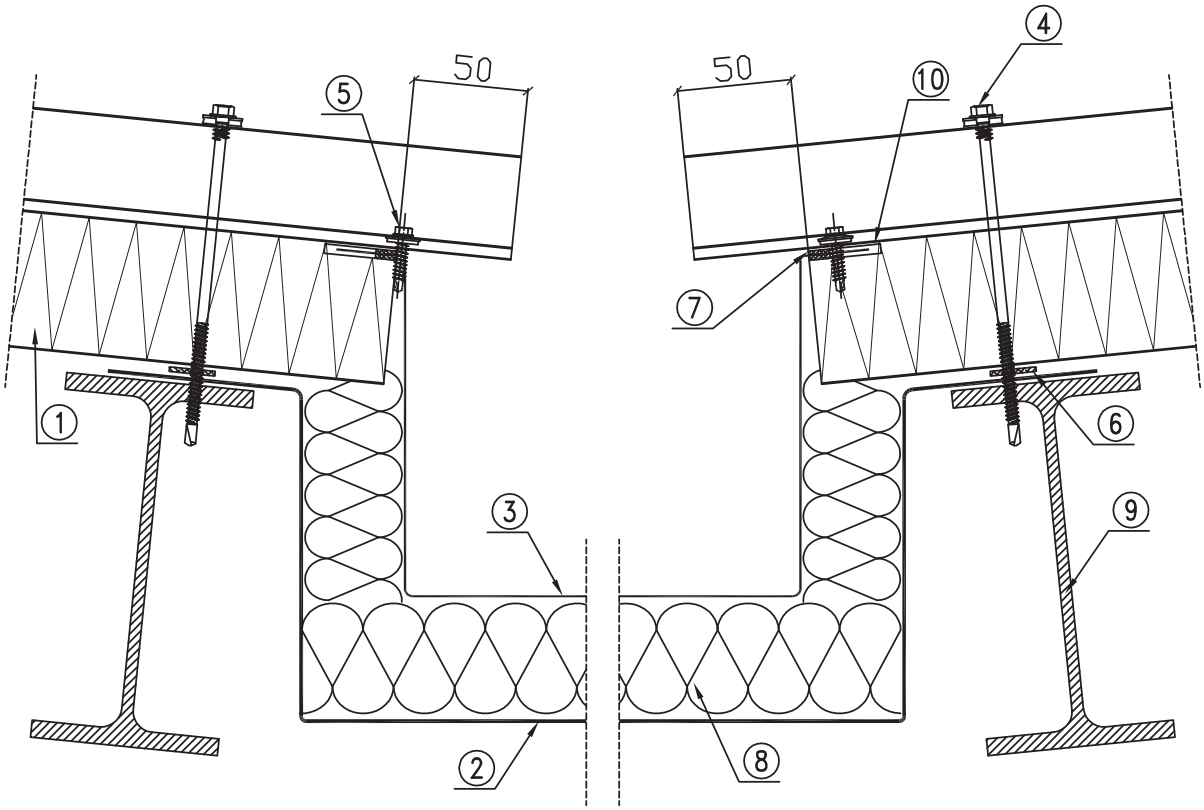

1. BALEXTHERM-MW-R roof panel with undercut core
2. Internal profile of gutter (acc. to a separate, individual architectural specification)
3. External profile of gutter (acc. to a separate, individual architectural specification)
4. LB 1- LB 5 fasteners for fastening BALEXTHERM panels
5. LB 6 self-drilling fastener or AL/Fe blind rivet every 300mm
6. PES 3x20 self-adhesive sealing tape (recommended) or equivalent
7. Butyl sealing compound or tape
8. Gutter heat-insulating material
9. Cold bent, hot rolled, wooden etc. steel purlin acc. to the construction design
10. Panel core cut to the depth of approx.30mm

3.10. MW-R08
Joint of panels with a prefabricated internal gutter

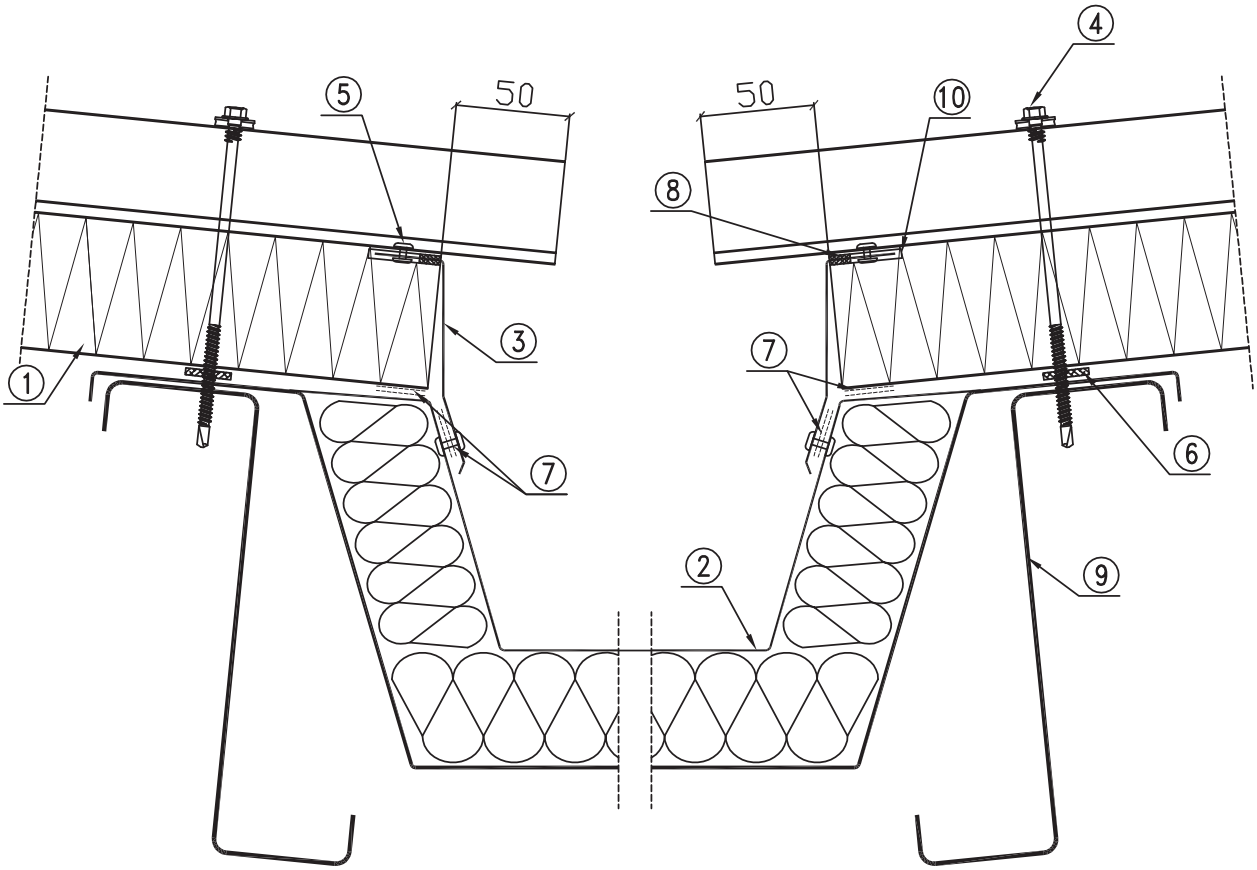

1. BALEXTHERM-MW-R roof panel with undercut core
2. Internal profile of prefabricated gutter (acc. to a separate, individual architectural specification)
3. Individual flashing
4. LB 1- LB 5 fasteners for fastening BALEXTHERM panels
5. LB 6 self-drilling fastener or AL/Fe blind rivet every 300mm
6. PES 3x20 self-adhesive sealing tape (recommended) or equivalent
7. Butyl sealing compound or tape
8. Gutter heat-insulating material
9. Cold bent, hot rolled, wooden etc. steel purlin acc. to the construction design
10. Panel core cut to the depth of approx.30mm

3.11. MW-R09
Joint of panels with a wall panel in the eaves

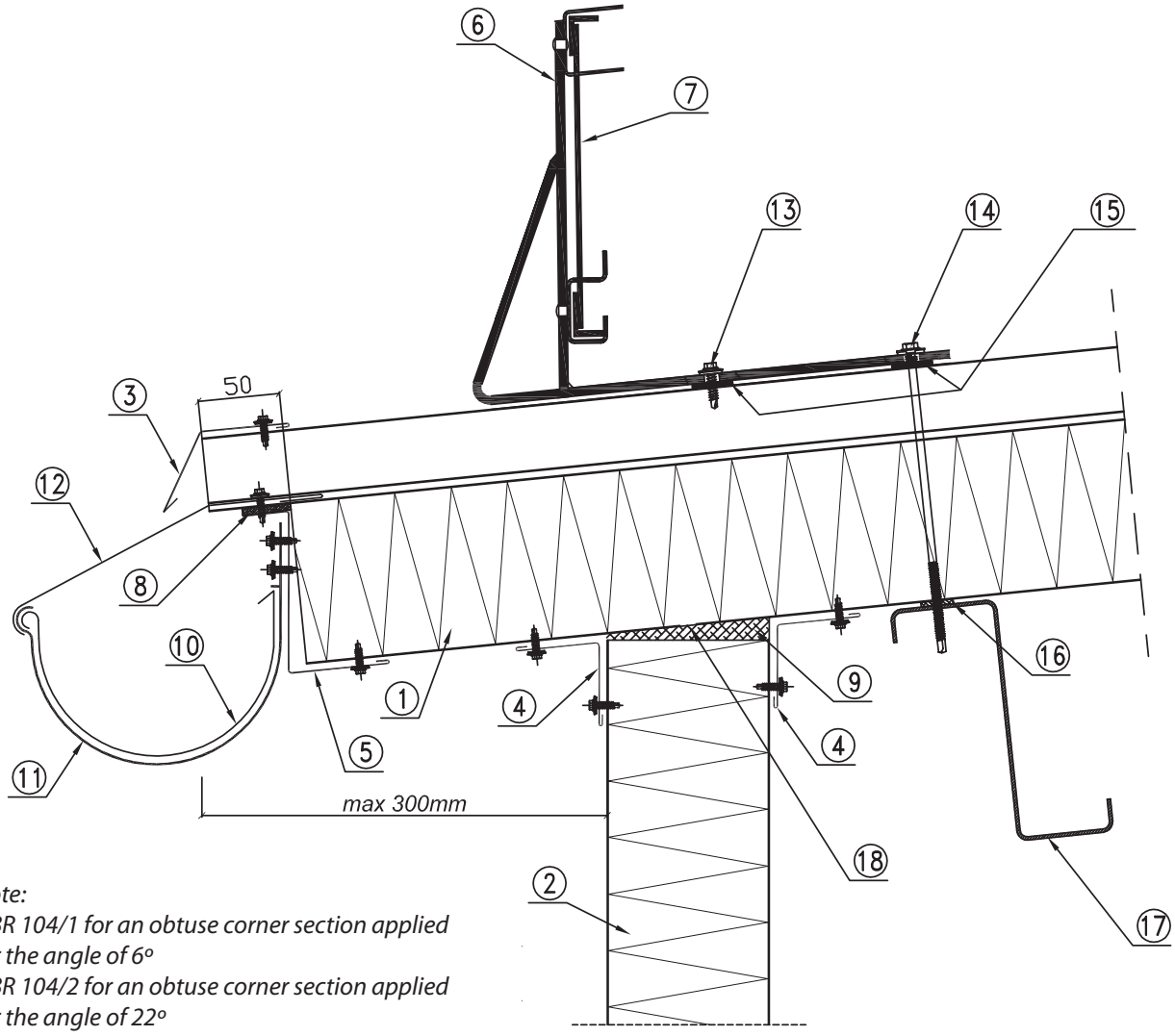

Note:
OBR 104/1 for an obtuse corner section applied for the angle of 6º
OBR 104/2 for an obtuse corner section applied for the angle of 22º

1. BALEXTHERM-MW-R roof panel with undercut core
2. BALEXTHERM-MW-W-ST or BALEXTHERM-MW-W-PLUS wall panel
3. OBR 203 flashing or individual flashing
4. OBR 104 flashing or individual flashing
5. OBR 62 flashing or individual flashing
6. **WPT** trapezoid snow guard support (3 pcs per one guard)
7. **PP** L=2000mm snow guard
8. Butyl compound or tape
9. Mineral wool sealing applied during assembly
10. Gutter acc. to the architecture design (with a slope)
11. Gutter hook
12. Gutter holder
13. self-drilling screw
14. BALEXTHERM panel fasteners: LB1 - LB5
15. 4x25mm butyl sealing tape or equivalent
16. PES 3x20 adhesive insulating tape or equivalent
17. Cold bent steel purlin (Z-beam)
18. Facing with a 10mm wide gap, to improve thermal insulation efficiency (throat distance of the support max 300mm)

3.12. MW-R10/1
Joining panels lengthwise (L>15m)

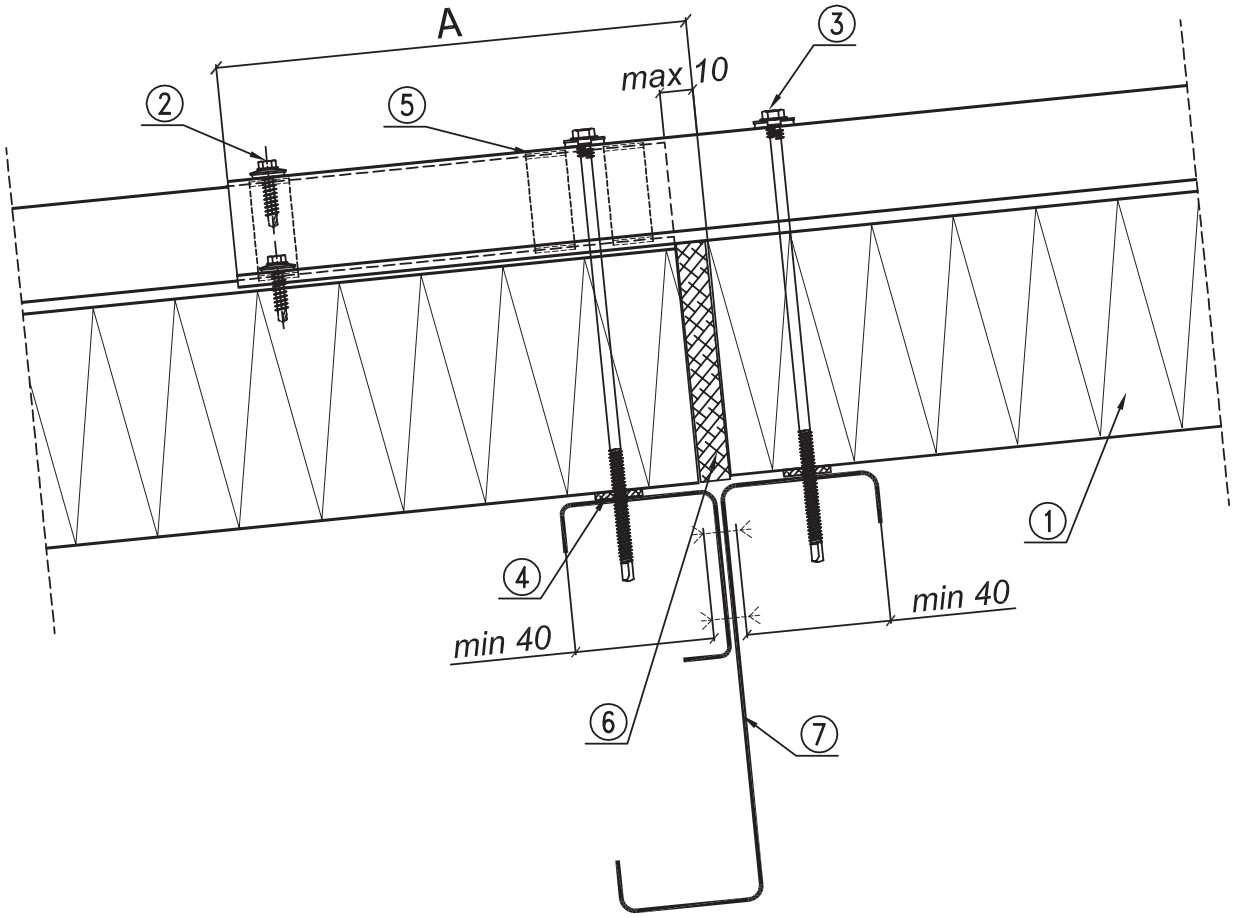

1. BALEXTHERM-MW-R roof panel with undercut core
2. LB 6 self-drilling fastener or AL/Fe blind rivet in every upper wave
3. LB 1- LB 5 fasteners for fastening BALEXTHERM panels
4. PES 3x20 self-adhesive sealing tape (recommended) or equivalent
5. Butyl sealing tape
6. Mineral wool sealing applied during assembly
7. Cold bent, hot rolled, wooden etc. steel purlin acc. to the construction design

Attention !
- Standard A=50 mm next to the eaves
- Standard A=150 mm next to the overlap
- max. A=200 mm next to the overlap
- min. A=10 mm without any overlap

3.13. MW-R10/2
Joining panels lengthwise (L>15m)

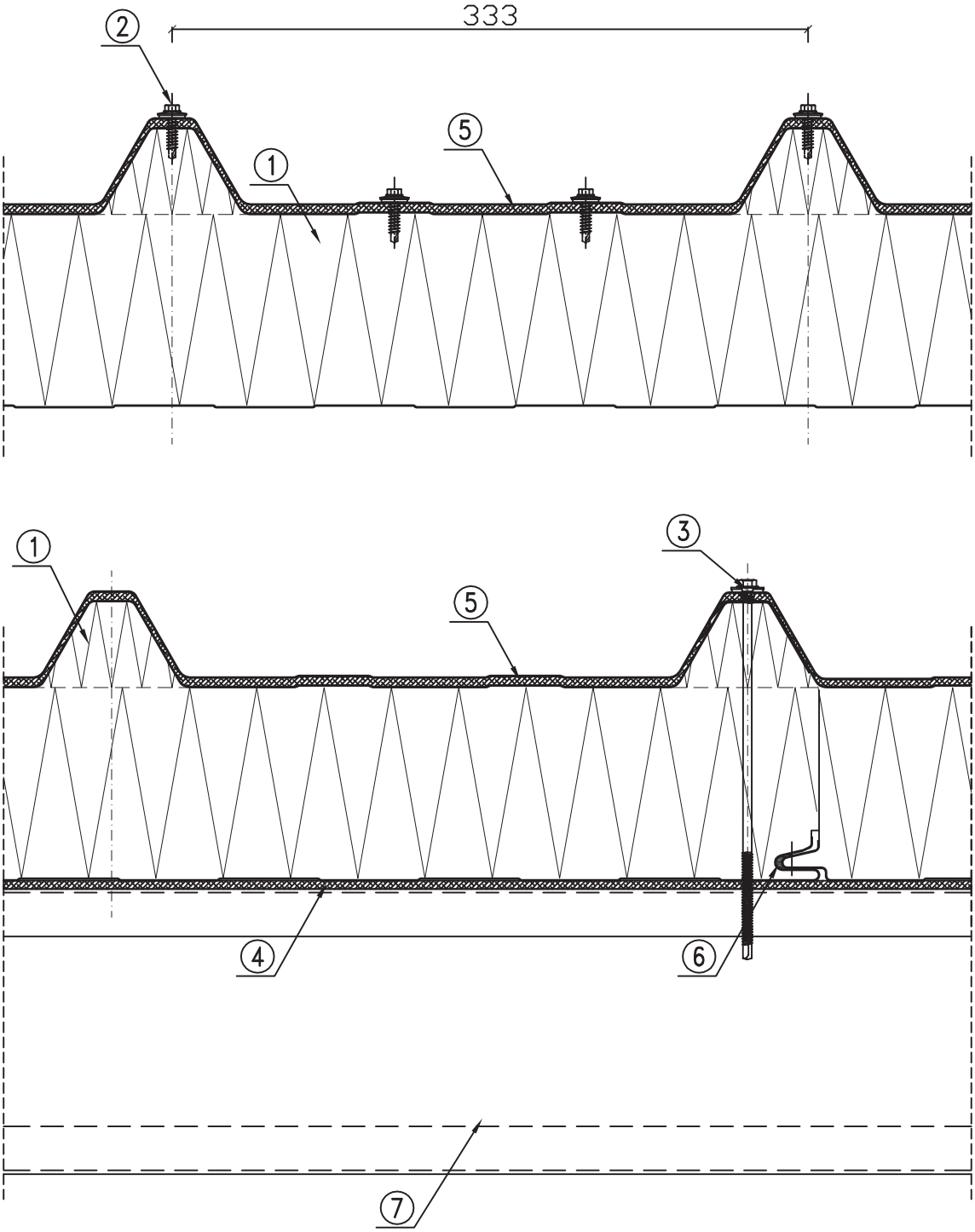

1. BALEXTHERM-MW-R roof panel with undercut core
2. LB 6 self-drilling fastener or AL/Fe blind rivet in every upper wave
3. LB 1- LB 5 fasteners for fastening BALEXTHERM panels
4. PES 3x20 self-adhesive sealing tape (recommended) or equivalent
5. Butyl sealing tape or mass
6. Sealing (butyl is recommended) – applied on site or gasket applied during production
7. Cold bent, hot rolled, wooden etc. steel purlin acc. to the construction design

3.14. MW-R11
Joint of panels with a prefabricated gutter by the attic

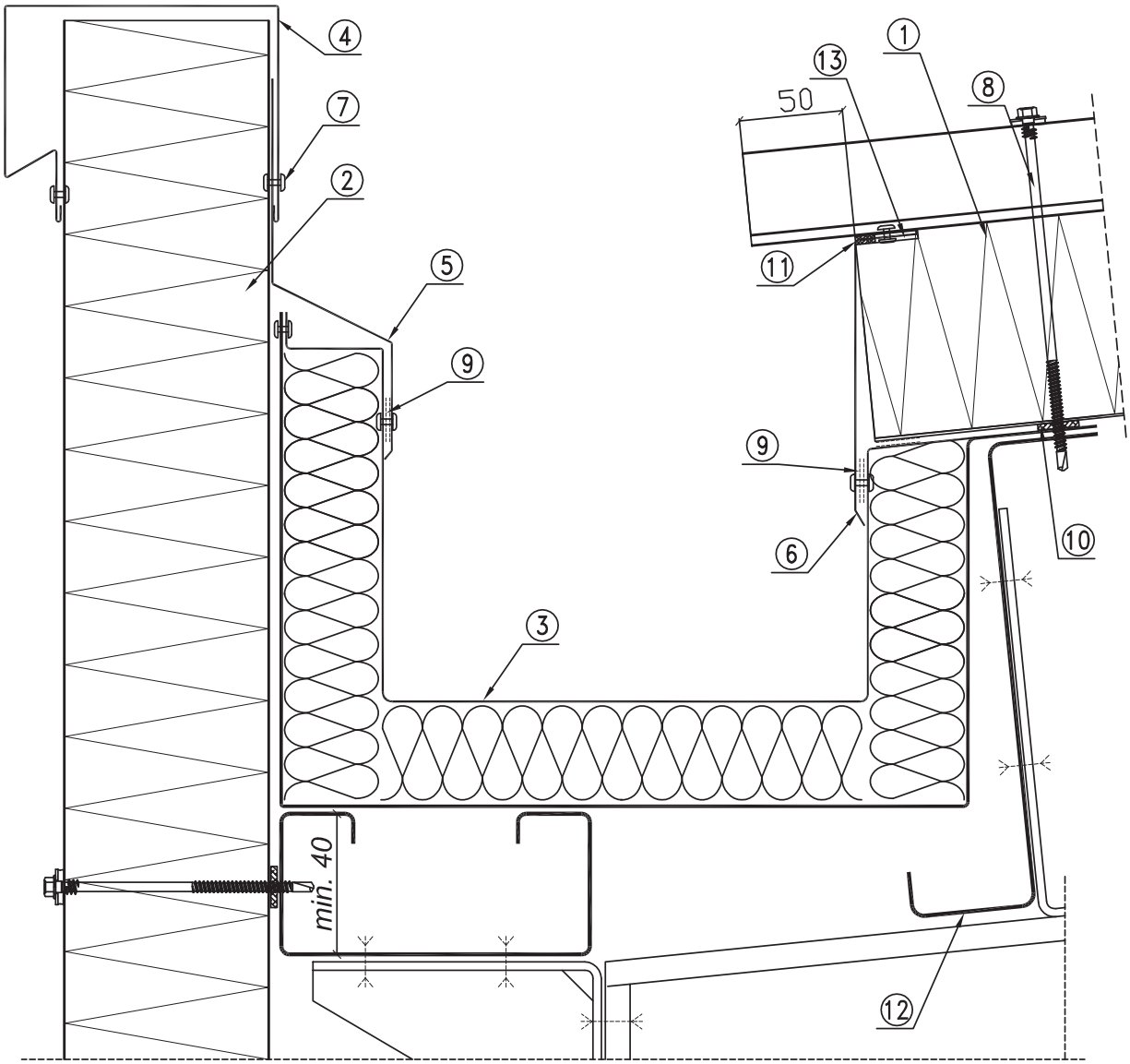

1. BALEXTHERM-MW-R roof panel with undercut core
2. BALEXTHERM-MW-W-W or BALEXTHERM-PU-W wall panel
3. Prefabricated gutter acc. to the architecture design (with a slope)
4. OBR 112 flashing or individual flashing
5. Individual flashing
6. Individual flashing
7. LB 6 self-drilling fastener or AL/Fe blind rivet every 300mm (a tight rivet on the external roof and gutter cladding)
8. LB 1- LB 5 fasteners for fastening BALEXTHERM panels
9. Butyl tape or mass
10. PES 3x20 self-adhesive sealing tape (recommended) or equivalent
11. Butyl sealing compound (recommended)
12. Cold bent, hot rolled, wooden etc. steel purlin acc. to the construction design
13. Panel core cut to the depth of approx.30mm

3.15. MW-R12
Joint of panels with an internal gutter by the attic

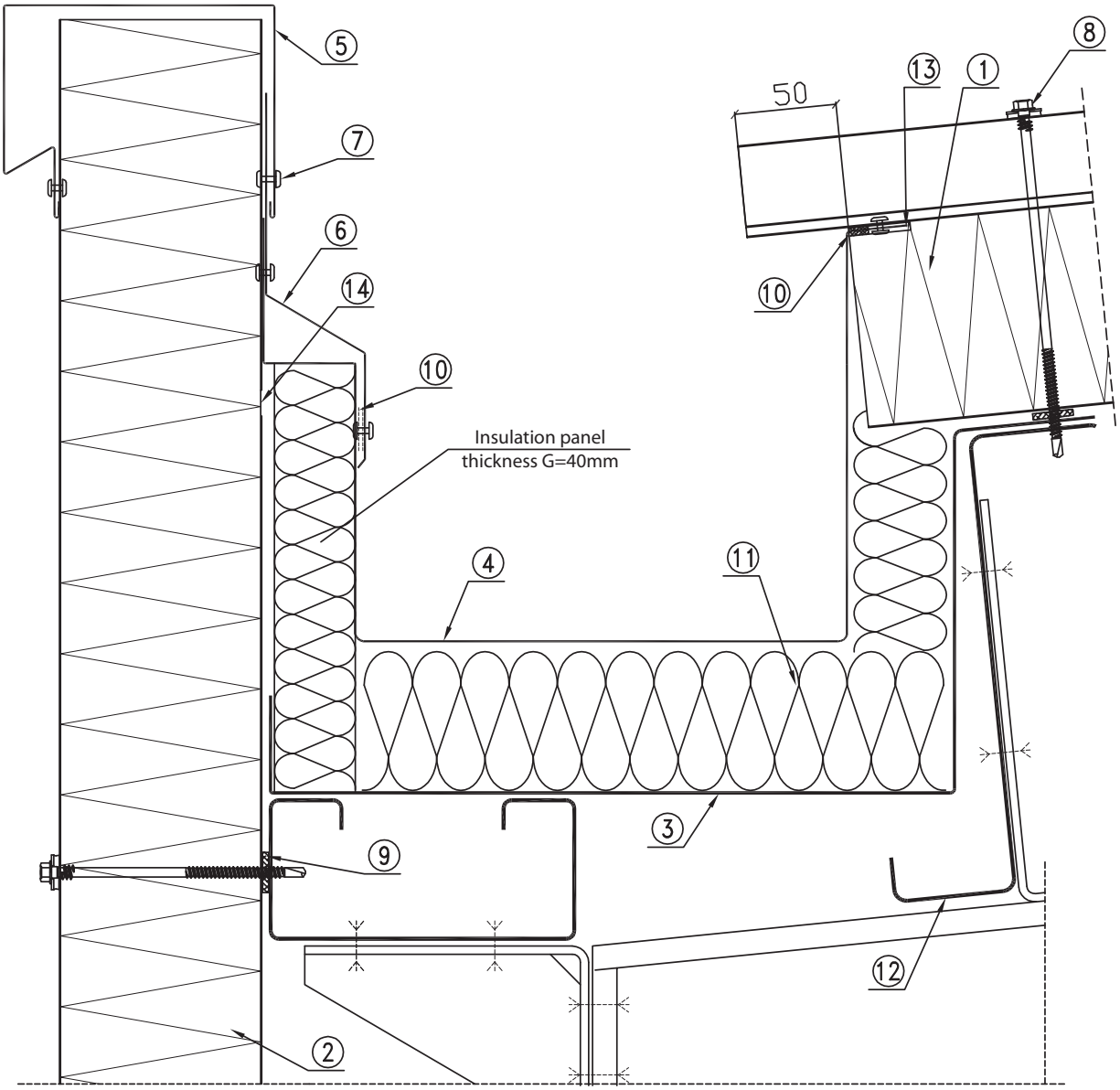

1. BALEXTHERM-MW-R roof panel with undercut core
2. BALEXTHERM-MW-W, BALEXTHERM-MW-D-W-ST, BALEXTHERM-MW-LT-W-ST or BALEXTHERM-PU-W wall panel
3. Internal profile of gutter trough according to a separate specification
4. External profile of gutter trough according to a separate specification
5. OBR 112 flashing or individual flashing
6. Individual flashing
7. LB 6 self-drilling fastener or AL/Fe blind rivet every 300mm (a tight rivet on the external roof and gutter cladding)
8. LB 1- LB 5 fasteners for fastening BALEXTHERM panels
9. PES 3x20 self-adhesive sealing tape (recommended) or equivalent
10. Butyl sealing compound or tape
11. Gutter thermal insulation material
12. Cold bent, hot rolled, wooden etc. steel purlin acc. to the construction design
13. Panel core cut to the depth of approx.30mm
14. Facing with a 10mm wide gap, to improve thermal insulation efficiency (throat distance of the support max 300mm)

3.16. MW-R13
Roof ridge skylight - longitudinal section

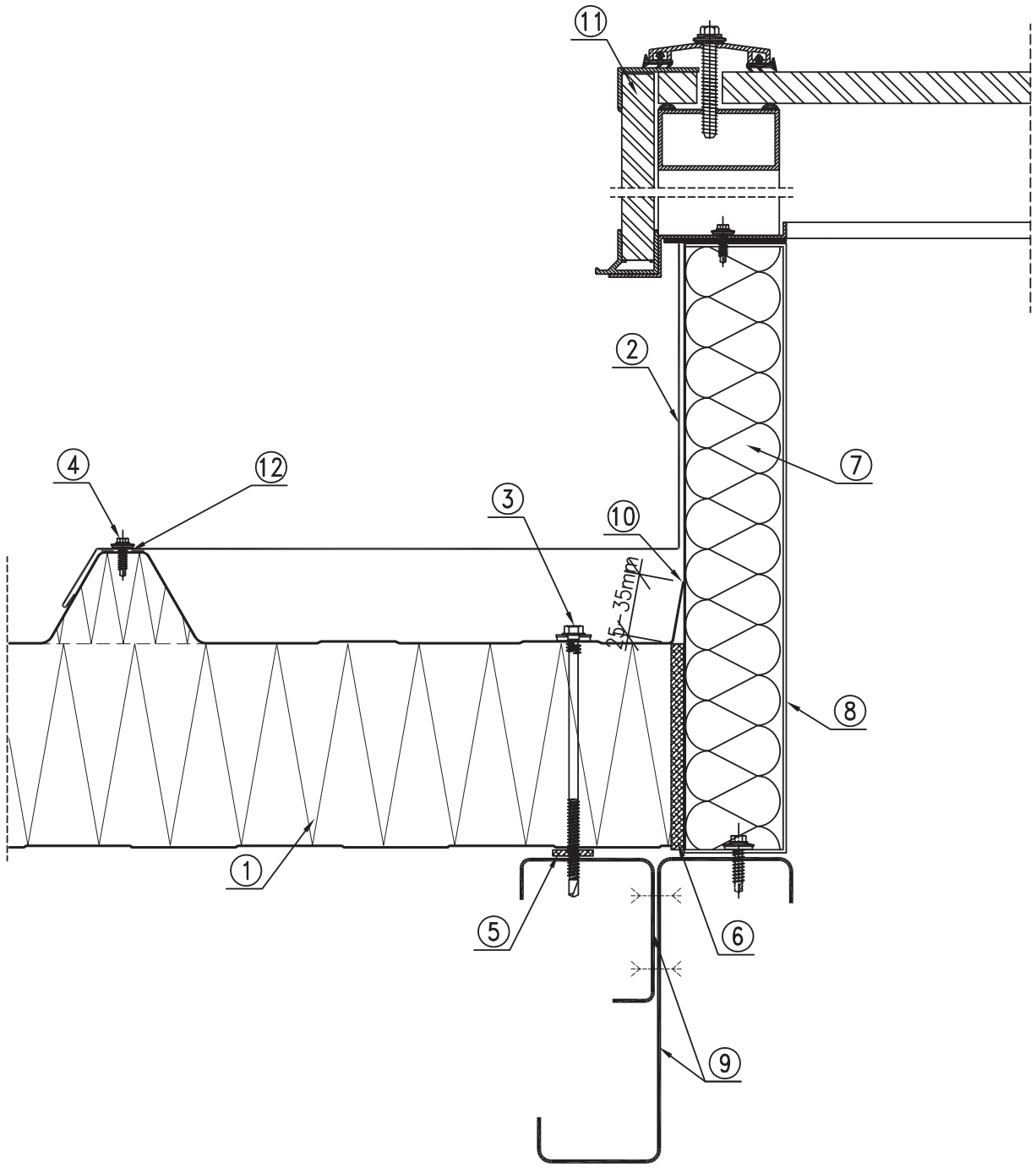

1. BALEXTHERM-MW-R roof panel
2. Individual flashing
3. LB 1- LB 5 fasteners for fastening BALEXTHERM panels
4. LB 6 self-drilling fastener or AL/Fe blind rivet every 300mm (a tight rivet on the external roof and gutter cladding)
5. PES 3x20 self-adhesive sealing tape (recommended) or equivalent
6. Mineral wool sealing applied during assembly
7. Skylight thermal insulation material
8. Skylight base according to a separate specification of skylight manufacturer
9. Bearing purlin according to the construction design + angle
10. Deflected upper facing
11. Skylight elements according to a separate specification of skylight manufacturer
12. Butyl sealing compound - recommended

3.17. MW-R14
Roof ridge skylight – cross section

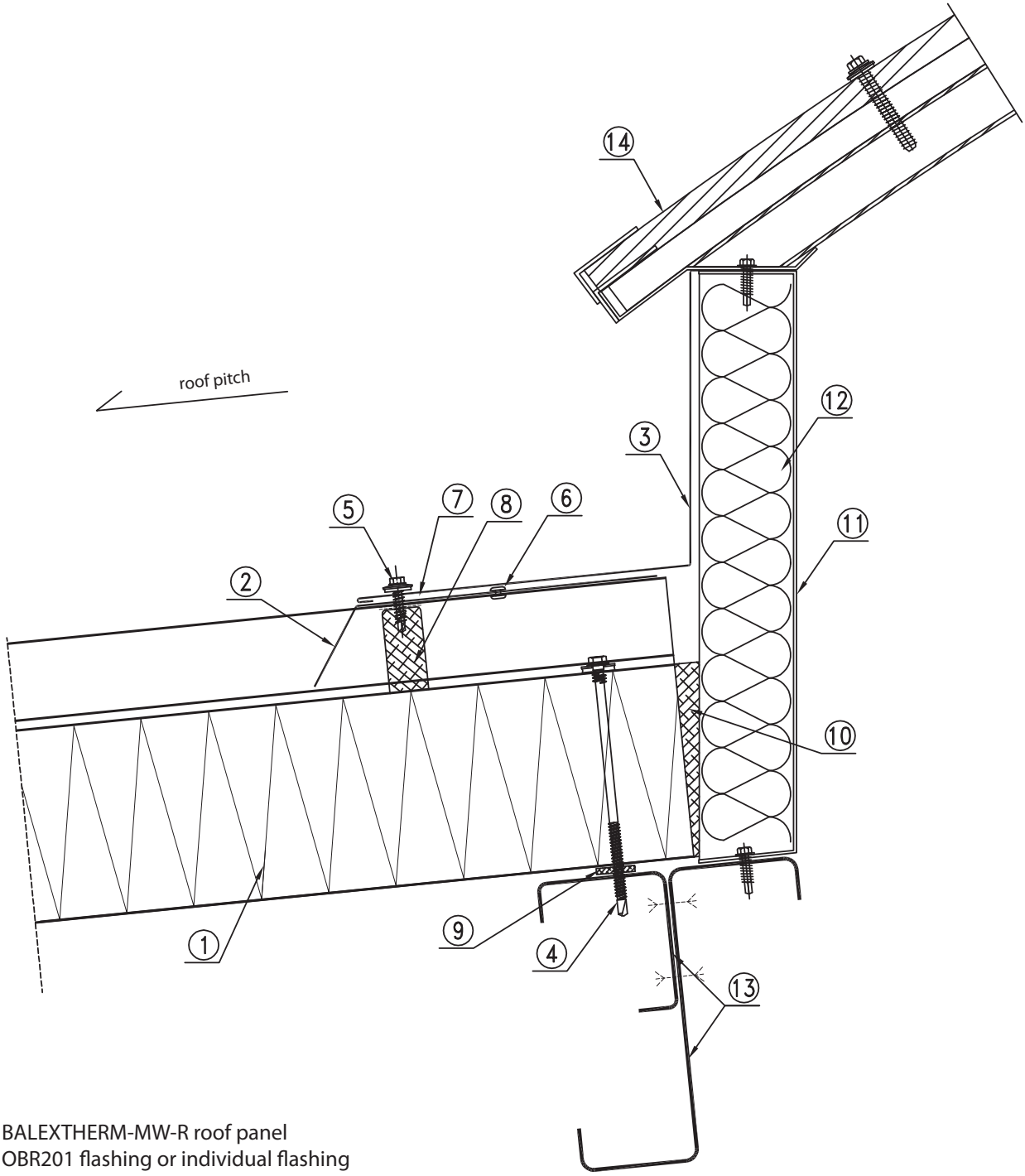

1. BALEXTHERM-MW-R roof panel
2. OBR201 flashing or individual flashing
3. Skylight planking
4. LB 1- LB 5 fasteners for fastening BALEXTHERM panels
5. LB 6 self-drilling fastener or AL/Fe blind rivet every 300mm (a tight rivet on the external roof cladding)
6. AL/Fe assembly blind rivet approx. every 1000mm
7. Butyl tape or mass
8. TUN45 sealing tape
9. PES 3x20 self-adhesive sealing tape (recommended) or equivalent
10. Mineral wool sealing applied during assembly
11. Skylight base according to a separate specification of skylight manufacturer
12. Skylight thermal insulation material
13. Bearing purlin + angle according to the construction design
14. Skylight elements according to a separate specification of skylight manufacturer

3.18. MW-R15
Roof ridge skylight – cross section

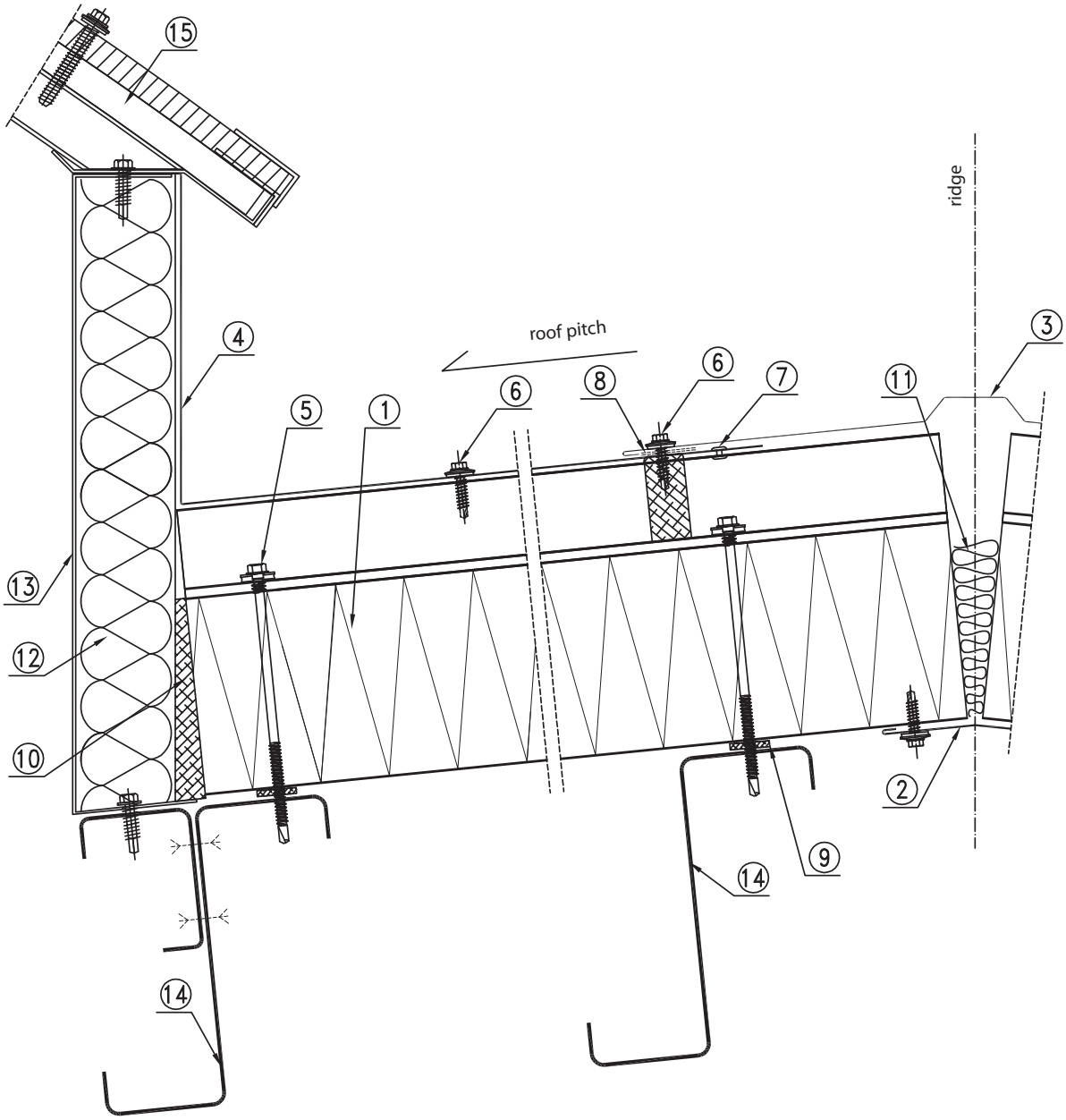

1. BALEXTHERM-MW-R roof panel
2. OBR 104 flashing
3. OBR 52 or OBR 205 flashing
Individual flashing – drawn to the roof ridge
5. LB 1- LB 5 fasteners for fastening BALEXTHERM panels
6. LB 6 self-drilling fastener or AL/Fe blind rivet every 300mm (a tight rivet on the external roof cladding)
7. AL/Fe blind rivet approx. every 1000mm
8. Butyl tape or mass
9. PES 3x20 self-adhesive sealing tape (recommended) or equivalent
10. Mineral wool sealing applied during assembly
11. Mineral wool sealing applied during assembly
12. Skylight thermal insulation material
13. Skylight base according to a separate specification of skylight manufacturer
14. Bearing purlin + angle according to the construction design
15. Skylight elements according to a separate specification of skylight manufacturer

Balex Metal Sp. z o. o.

ul. Wejherowska 12C
84-239 Bolszewo
NIP 588-11-30-299
Regon 191112216
KRS 0000176277

kontakt@balex.eu
+48 58 778 44 44 / 801 000 807

balex.eu

INDEX 01.04.2021