BALEXMETAL

COLD STORAGE SANDWICH PANELS

TECHNICAL CATALOGUE

BALEXMETAL
WE BUILD TOGETHER

BALEXTHERM-PU-F

Sandwich cold storage panel with polyurethane core

April 2017

TABLE OF CONTENTS

I. TECHNICAL INFORMATION ON ENCLOSURE MADE OF SANDWICH PANELS

1. General information – about the company 6
2. Sandwich panel construction 6
3. Production technology 7
4. Panel types 7
5. Basic technical information 7
6. Designation, scope of application 8
7. Panel connections 8
8. Longitudinal panel joint (benefits) 9
9. Fastening BALEXTHERM-PU-F panels to the bearing structure 10
10. Thermal insulation properties 14
11. Strength 16
12. Fire safety 23
13. Sound insulation properties 24
14. Corrosion resistance 24
15. Material and cladding coatings 25
    15.1. Material 25
    15.2. Coatings 25
16. Profile type combinations 27
17. Cladding colour scheme 28
18. General guidelines on assembly 28
19. Instructions on making holes in BALEXTHERM 30
20. Guidelines 31
21. Certification documents 33

II. CONSTRUCTION AND ARCHITECTURAL DETAILS

1. Basic drawings 36
    1.1. F01 BALEXTHERM-PU-F panel - joint, profile types 36
    1.2. F02 Fastening panels in the joint to the transom 38
2. Fastening system by means of insulating nuts with steel insert 39
    2.1. F03 System of fastening cold storage panels by means of insulating nuts with steel insert 39
    2.2. F04 Fastening panels to hot-rolled transom by means of insulating nuts with steel insert 40
    2.3. F05 Suspending panels under the ceiling by means of insulating nuts with steel insert 41
3. System of fastening cold storage panels by means of insulating polyamide sleeves 42
    3.1. F06 System of fastening cold storage panels by means of insulating polyamide sleeves 42
    3.2. F07 Fastening panels to hot-rolled transom by means of insulating polyamide sleeves 43
    3.3. F08 Fastening panels to thin-walled transom by means of insulating polyamide sleeves 44
    3.4. F09 Sliding panel joint on a wall transom 45
    3.5. F10/1 Joining wall panels lengthwise. Cross section of the area of fastening to the wall transom 46
    3.6. F10/2 Joining wall panels lengthwise. Cross section outside the area of fastening to the wall transom 47
    3.7. F11 Suspending panels under the ceiling by means of insulating polyamide sleeves 48
    3.8. F12 Fastening panels in the ceiling and joining them lengthwise 49
4. System of fastening cold storage panels by means of stainless steel fasteners 50
    4.1. F13 System of fastening cold storage panels by means of stainless steel fasteners 50
    4.2. F14 Fastening panels to thin-walled transom by means of stainless steel fasteners 51
5. System of fastening Balextherm-PU-F cold storage sandwich panels with the use of LAX fasteners 52
    5.1. F25 System of fastening Balextherm-PU-F cold storage sandwich panels with the use of LAX fasteners 52
6. Suspending panels under the ceiling by means of PCV profiles 53
    6.1. F15 Suspending panels under the ceiling by means of a T profile 53
    6.2. F16/1 Suspended ceiling with TO.ALU.02 profile – recommended for cold roooms 54
    6.3. F16/2 Suspended ceiling with TH.ALU.02 – recommended for freeze rooms 55
7. Solutions for cold storage panel corners 56
    7.1. F17 Fastening wall panels in the corner 56
    7.2. F18 Joint of wall and ceiling panels in the corner 57
    7.3. F19 Joint of partition walls with external walls 58

7.4. F20/1 Joint of partition walls with the ceiling....59
7.5. F20/2 Fastening of a partition wall on a groove profile....60
7.6. F21 Joint of external wall with the floor and a concrete base....61
7.7. F22 Joint of internal wall with a concrete base....62
7.8. F23 Joint of internal wall with a PVC base....63
7.9. F24 Cold storage door installation....64

I. TECHNICAL INFORMATION ON ENCLOSURE MADE OF SANDWICH PANELS

1. GENERAL INFORMATION – ABOUT THE COMPANY

Balex Metal Sp. z o.o. is the leading manufacturer of steel construction materials in Poland. The Company's offer includes complete solutions as well as steel roofing and façade systems for housebuilding industry, commercial and agricultural construction.

The range of products is recognised by customers in Poland, Belarus, Russia, Lithuania, Latvia, Estonia, Ukraine, Czech Republic, Slovakia, Germany, Denmark, Sweden and Norway. Consulting and sales services are provided through own network of regional branches, cooperating distributors and a team of professional sales advisors.
Balex Metal owes its leading position in the market of manufacturing double-clad insulating core sandwich panels to its technologically advanced production lines purchased from the most renowned European companies, the team of employees with excellent qualifications as well as its special attention to quality.

2. SANDWICH PANEL CONSTRUCTION

Balex Metal company provides wide range of steel faced sandwich panels with polyurethane core marked with BALEXTHERM-PU trade name. The range of products includes wall and roof sandwich panels for industrial halls, warehouses, sports halls, production facilities, commercial pavilions and facilities, offices, social and public utility buildings. More detailed information concerning sandwich panels for the above mentioned applications is available in the Technical Catalogue of BALEXTHERM-PU-W-PLUS, BALEXTHERM-PU-W-ST and BALEXTHERM-PU-R sandwich panels with a polyurethane core. The thickness of panels ranges from 40 mm to 100 mm.

The panels described in this catalogue supplement the range of products and are modern cold storage panels for cold stores under the BALEXTHERM-PU-F trade name. They are considerably thicker ranging from 120 mm to 200 mm.

BALEXTHERM-PU-F sandwich panels consist of two stainless steel claddings and a structural-insulating core. The core is made of non-freon polyurethane foam foamed with pentane, with density of 40±3 kg/m^3 (environmentally friendly due to the applied foaming agent) with the highest thermal insulation value among all known insulation materials. It is responsible for transmitting shear stress, maintaining fixed distance between the claddings and ensuring high thermal insulation values. The calculation thermal conductivity coefficient equals λ_{obl} = 0.022 W/m^{2}K with average temperature of a division wall of 0°C.

There are two types of polyurethane core used in production of BALEXTHERM-PU sandwich panels: PUR and PIR foams.Polyisocyanurate PIR foams are characterized by improved resistance to high temperature. Flat bonds of PUR foams decompose in approximately 200°C, and carbonization in combustion is only 20%. Isocyanurate structures in PIR foams decompose in temperature approximately 325°C, and carbonization reaches up to 50%. This was confirmed by fire resistance testing. Significant carbonization of PIR foam constitutes a barrier for spreading of fire due to low thermal conductivity of carbonized layers and resistance to oxidation. This way the material from deeper layers of PIR foam is protected from combustion, and the carbonized layer prevents high temperature from passing through sandwich board. As a result, greater fire protection is achieved.

Panel claddings are responsible for transmitting normal stress and securing a particular facility against weather conditions.

BALEXTHERM-PU-F sandwich panel's claddings are made of S220GD, S250GD and S280GD steel metal sheet galvanized on both sides and steel metal sheet S250GD and S280GD according to PN-EN 10346 with aluzinc coating (coating weight ≥ 185 g/m^2), plated with organic coating or made of stainless steel (1.4301) according to EN 10088-1:1998.

Standard steel cladding of sandwich panels is coated with polyester varnishes. Due to often increased anticorrosive requirements and contact with food in the case of warehouses, cold stores and carrying freezers the claddings can be coated with PVDF, PVC(F).

The polyurethane core in the longitudinal joint is milled in the production process to the shape of a double tongue and groove in order to obtain maximum tightness and improved thermal insulation value. The shape of locks of the outside and inside cladding formed as a double metal sheet wrap that contributes to increasing resistance to fire and maintaining the integrity of panels' joint even in severe conditions of fire testing.

Such construction of the panel guarantees fulfilling high requirements concerning thermal insulation, high load-bearing capacity and rigidity with wide range of acceptable temperature differences of outside and inside claddings. It enables application of considerable spans of supports both in the ceiling and on the walls at the same time.

3. PRODUCTION TECHNOLOGY

The production of BALEXTHERM sandwich panels is continuous and performed on a fully automated assembly line delivered by one of the leading suppliers in the trade, Hennecke company (Germany). Pentane is used as the foaming agent which makes the production process environmentally friendly i.e. not damaging the ozone layer.

The technological process of producing sandwich panels with polyurethane core consists of injection of mixed components forming rigid polyurethane foam between two continuously moving metal sheet panels of the upper and lower steel cladding (with previously profiled longitudinal joints and the main profile) and using paper tape preventing foamed polyurethane from sticking to side chains forming the core's longitudinal profile at the same time. Panels' sections cut to appropriate dimensions with the use of a saw slide along the so called cooling conveyor in order to undergo the process of double-side milling of the core's longitudinal profile at the final stage. In the course of milling the paper tape is removed and pure polyurethane is exposed. At the final stage of the production process panels are automatically packed in transport packages and wrapped in shrink film.

High quality and fixed repeatability of technical parameters has been achieved due to the application of top class materials and continuous control of production.

4. PANEL TYPES

BALEXTHERM-PU-F wall and ceiling cold storage panels are provided in four thicknesses with the modular width (so called covering width) 1100 mm. Profiling outside and inside claddings is performed as standard in two versions as lined and flat, marked with L and G symbols.

Attention!
It is possible to profile one of the claddings as microprofiled marked with M symbol to special orders after consultations with the orderer.

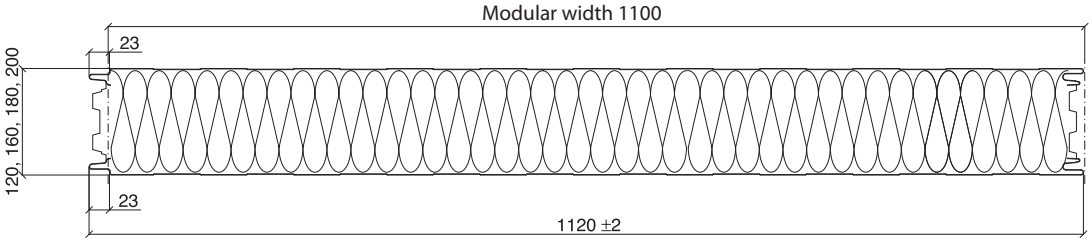

5. BASIC TECHNICAL SPECIFICATION

Table 1. Technical specification

Type of panel	Standard thickness of claddings [mm]		Panel's thickness [mm]	Panel's length [m]		Panel's weight [kg/m²]
	external	internal		min.	max.	
BALEXTHERM-PU-F 120	0,50	0,50	120	2	18	13,40
BALEXTHERM-PU-F 160			160			15,00
BALEXTHERM-PU-F 180			180			15,80
BALEXTHERM-PU-F 200			200			16,80

6. DESIGNATION, SCOPE OF APPLICATION

BALEXTHERM-PU-F cold storage sandwich panels are to be used as external walls, ceilings (in this case covered with additional panels like e.g. corrugated sheet) and internal partitions in stationary stores, cold stores and carrying freezers as well as elements of chambers (of the same application) inside other facilities or as wall warming elements or ceilings in existing buildings.

Panels used as external partitions transmit heat and wind load and ceiling panels covered with additional coat, so called tropical, transmit only heat load.

Depending on the thickness of the core and indoor temperature of a room the following scope of application is anticipated:

- the core 120 mm thick - room temperature reaching -15°C
- the core 160 mm thick - room temperature reaching -30°C
- the core 180 mm thick - room temperature reaching -40°C
- the core 200 mm thick - room temperature reaching -50°C

The application of cold storage sandwich panels should be in accordance to the technical design regarding the harmonized European norm PN-EN 14509 concerning BALEXTHERM-PU-F panels as well as the requirements of local standards and building codes.

7. PANEL CONNECTIONS

The whole product line of BALEXTHERM sandwich panels includes a new constructional solution concerning the shape of steel claddings in the longitudinal joint of panels. A unique shape of longitudinal joints with optimal proportion between the thickness of the tongue and the depth of the groove in both claddings, internal and external one, had considerable effect on increasing fire resistance parameters of panels.

In addition in the case of BALEXTHERM-PU-F panels we introduced precise milling of the polyurethane core in the shape of a double tongue joint (it is a novelty in cold storage panels).

In the case of cold storage panels the solution described above guarantees good thermal performance and eliminates linear thermal bridge and satisfies the highest requirements concerning fire resistance, fastness to rain waters, air and steam infiltration.

BALEXTHERM-PU-F panels can be fastened to the load-bearing structure with the use of two different fastener insulation systems eliminating point thermal bridges and with the use of self-drilling and self-tapping eyelet fasteners made of stainless steel. The characteristics of the fastening and the rules of their selection are described in the catalogue further on.

8. LONGITUDINAL PANEL JOINT (BENEFITS)

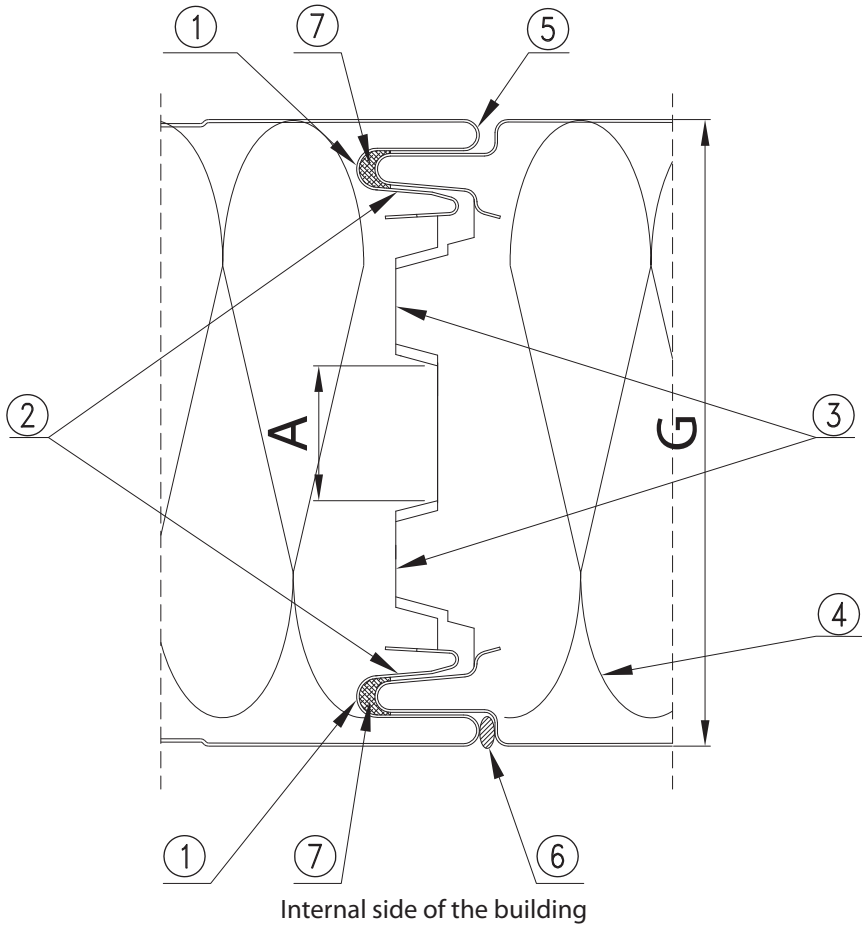

Fig.2 Longitudinal BALEXTHERM-PU-F panel joint

1. Double-sided unique shape of the panel joint in the form of a double lock.
2. Conic inclination of the surface of the internal panel's joint facilitating assembly.
3. A milled joint in the shape of a double tongue joint eliminating linear thermal bridge where A = 26 mm for G = 120 and A = 61,7 mm for G = 160, 180, 200 mm
4. A core made of rigid polyurethane foam
5. Appropriately formed shape of claddings ensuring high resistance of anticorrosive coatings
6. A gap enabling application of permanently plastic sealing compound (e.g. SOUDAFLEX)
7. Sealing compound preventing steam and air infiltration
   *option on demand

9. FASTENING BALEXTHERM-PU-F PANELS TO THE BEARING STRUCTURE

BALEX METAL provides designers and contractors with four different systems of fastening cold storage panels to the load-bearing structure. Two first systems of fastening eliminate point thermal bridges and are designed mainly for cold stores and carrying freezers.

A designer should decide on selection of an appropriate fastening system taking into consideration appropriate law regulations.

The first version of fastening cold storage sandwich panels with the use of insulating nuts with steel insert consists in fastening panels to the structure with the use of M 10 galvanized steel bars twisted from the side of the structure with a galvanized nut and from the side of the chamber with a special PVC nut with a steel insert placed inside it. A special PVC washer Ø60 mm in diameter enables transmitting heat and wind load to the steel claddings. Plastic PVC elements are provided in basic colours RAL 9002 and 9010.

ATTENTION!
Acceptable load for a single fastener in a critical state of usage (Version I) is 210 daN.

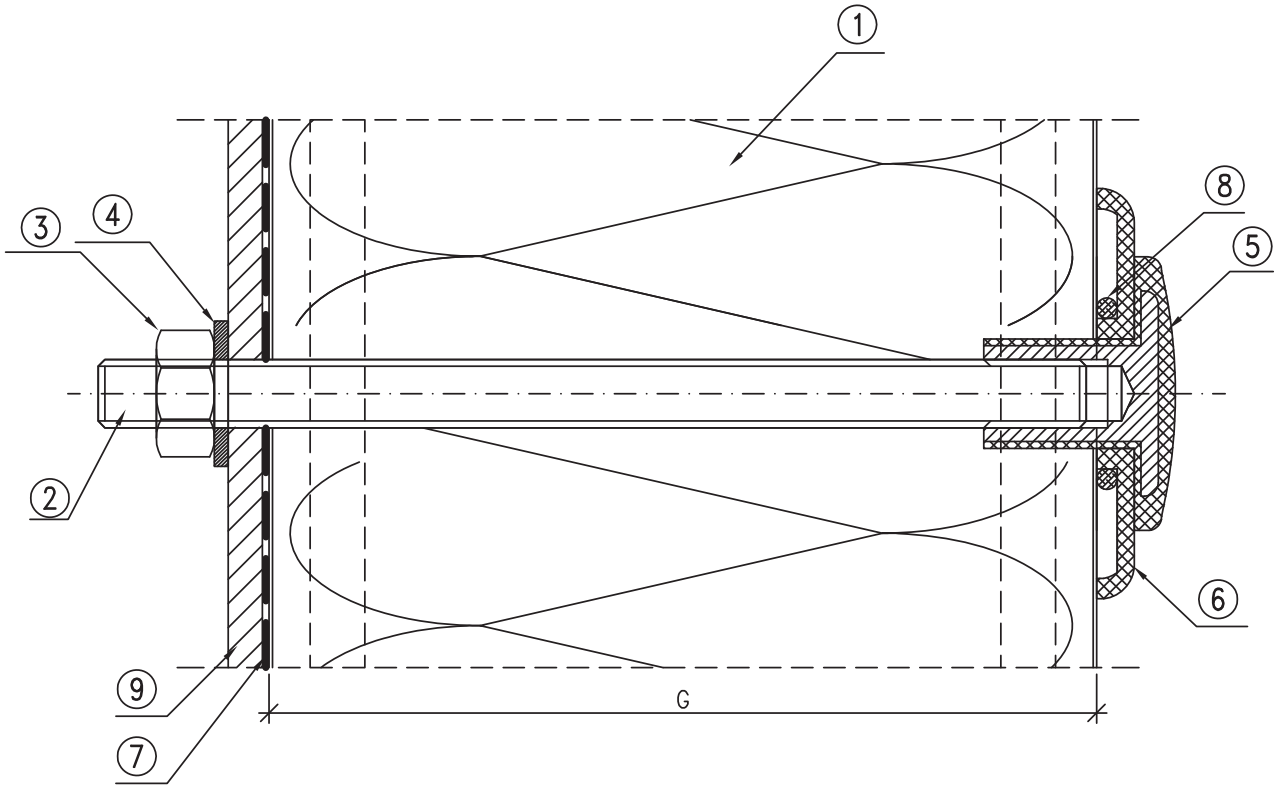

Fig. 3. The fastening system of BALEXTHERM-PU-F cold storage sandwich panels with the use of insulating nuts with a steel insert.

1. BALEXTHERM-PU-F panel
2. M 10XL galvanized bar, where L = G + 25 mm
3. M 10 galvanized nut
4. Ø21/Ø10.5 galvanized washer
5. PVC insulating nut with a steel INJ 235 insert
6. PVC INJ 24 washer
7. Self-adhesive polyethylene tape (recommended)
8. Permanently plastic sealant (recommended SOUDAFLEX)
9. Element of the building's structure

Version II of fastening cold storage sandwich panels consists in fastening panels to the load-bearing structure with the use of a polyamide sleeve screwed on both sides with the help of two M10 screws. A special steel washer Ø70 mm in diameter (galvanized and varnished in the colour of the panel) is responsible for transmitting heat and wind load to steel claddings.

ATTENTION!
Acceptable load for a single fastener in a critical state of usage (Version II) is 250 daN.

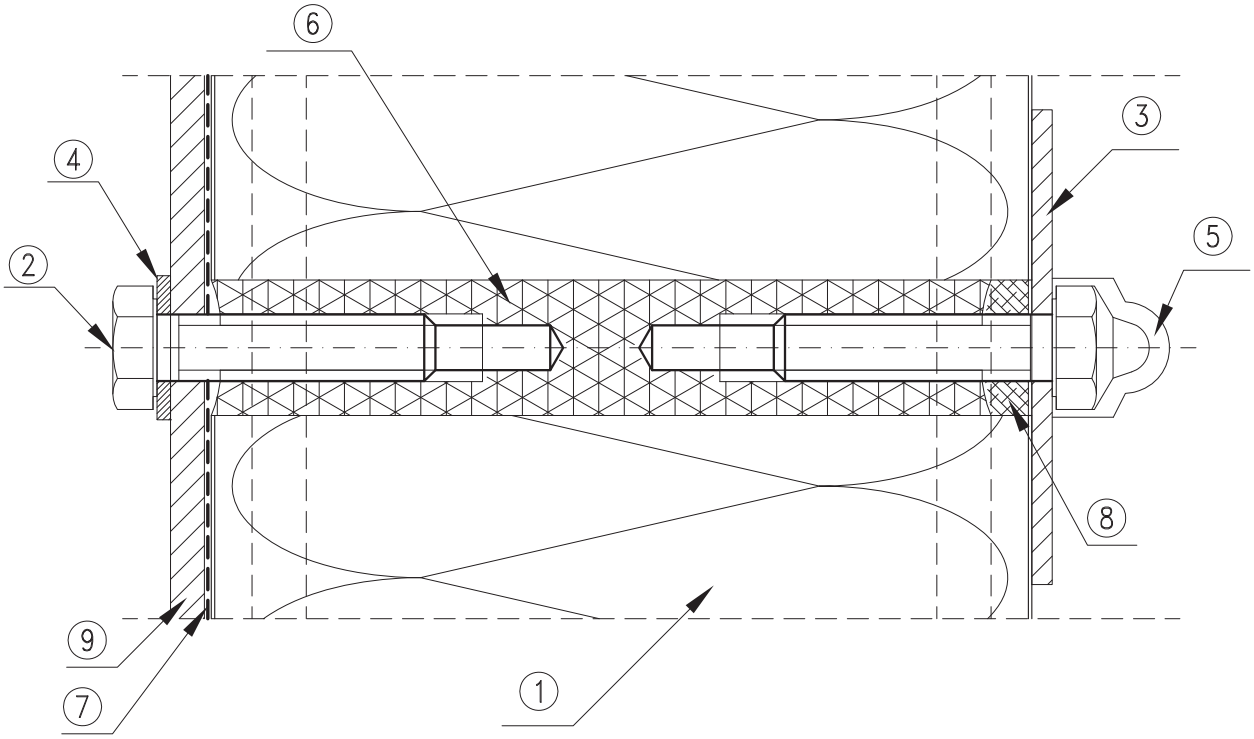

Fig. 4. The fastening system of BALEXTHERM-PU-F cold storage sandwich panels with the use of insulating polyamide sleeves.

1. BALEXTHERM-PU-F panel
2. Galvanized M 10x40 screw
3. Galvanized varnished LB 71 load carrying washer Ø70/Ø10.5 (white as standard)
4. Ø21/Ø10.5 galvanized washer
5. White protective cap
6. LB 70 polyamide sleeve
7. Self-adhesive polyethylene tape (recommended)
8. Permanently plastic sealant (recommended SOUDAFLEX)
9. Element of the building's structure

Version III of fastening consists in joining wall panels with the transom back member for buildings with temperatures t ≥ 0°C with the help of self-drilling and self-tapping eyelet fasteners made of stainless steel characterized by 5 times lower heat conductivity than fasteners made of carbon steel.

ATTENTION!
Acceptable load for a single fastener in a critical state of usage (Version III) with a Ø19 mm washer is 100 daN.

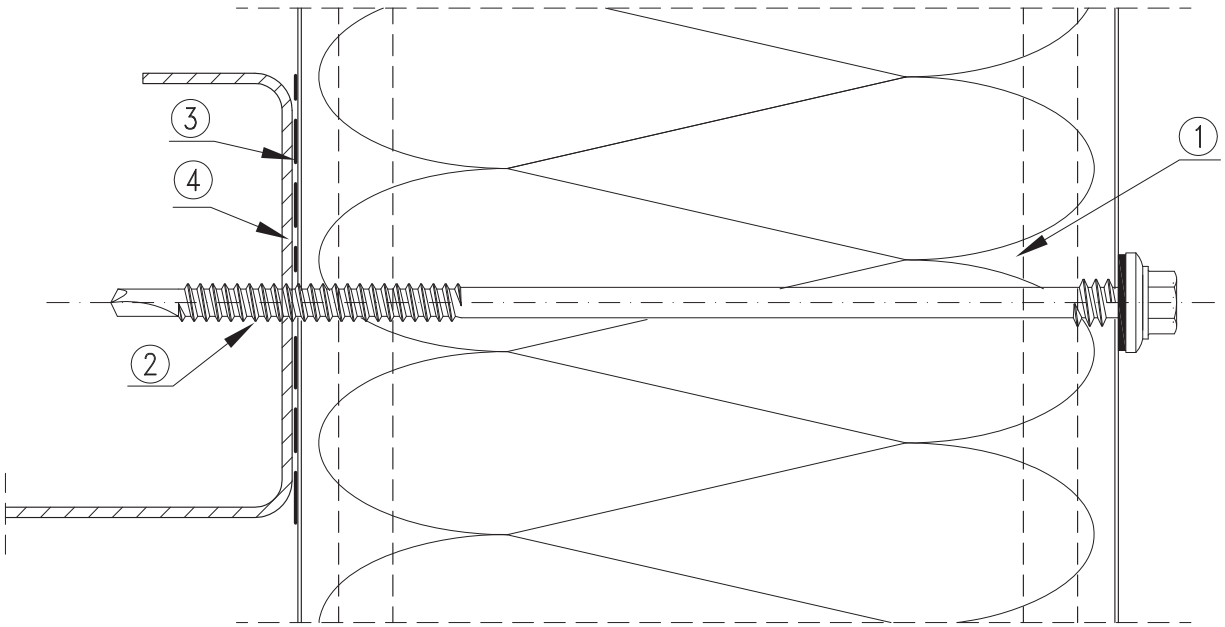

Fig.5 The fastening system of BALEXTHERM-PU-F cold storage sandwich panels with the use of self-drilling screws.

1. BALEXTHERM-PU-F panel
2. Stainless steel fastener for fastening panels
3. Self-adhesive polyethylene tape (recommended)
4. Element of the building's structure

Version IV of fastening of cold storage sandwich panels consists in using the LAX set (screw/bushing/cap) for installation.
The LAX anchor is designed especially for installation of sandwich panels in refrigeration plants and freezers with constant operational temperature up to - 40°C. The LAX anchor eliminates occurrence of the thermal bridge phenomenon. In case of use in structures with controlled atmosphere, a silicone for the required temperature must be used in order to seal the LAX anchor. The silicone can be applied directly inside the LAX anchor bushing, as well as under the flange of the bushing.The length and the type of the screw must be selected according to the type of the base and the thickness of the sandwich board. The minimum distance for fastening with LAX anchors:
- 1 cm from the edge of the sandwich panel (measured from external diameter of the LAX anchor),
- min. 10 cm from the other LAX anchor

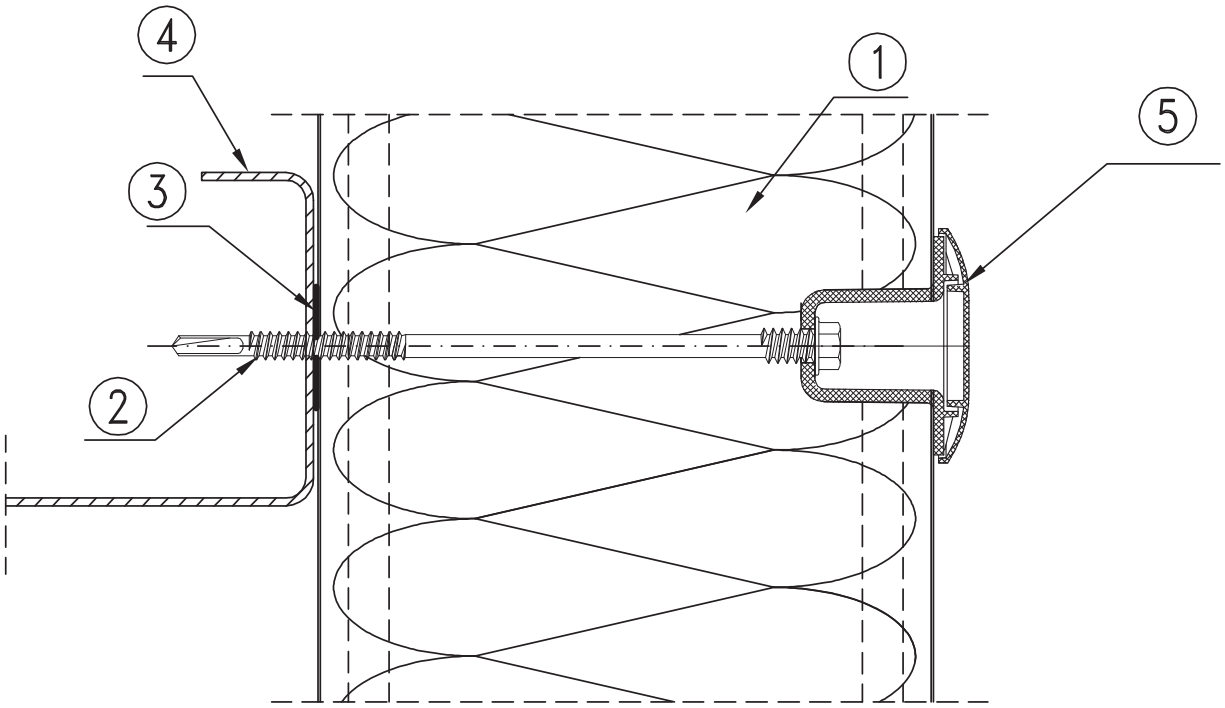

Figure 6. The fastening system for cold storage sandwich panels Balextherm-PU-F with the use of LAX anchors.

1. BALEXTHERM-PU-F panel
2. BALEXTHERM panel fastener
3. Wall spandrel beam according to structure design
4. PES 3x20 polyethylene adhesive tape (recommended)
5. LAX bushing and cap (9010 colour)

Fastening system should be decided by the designer, taking into account appropriate building regulations.

10. THERMAL INSULATION PROPERTIES

BALEXTHERM cold storage panels are distinguished by very good thermal performance parameters. Tests and calculations carried out in the Building Research Institute in the Department of Thermal Physics in Warsaw aimed at determining the heat conductivity coefficient of polyurethane foam forming the panel's insulating core and the partition's heat-transfer coefficient proved high quality as well as high repeatability of BALEXTHERM-PU-F panels' parameters achieved due to the application of top class materials and continuous control of all production stages on one of the most modern assembly lines in Europe. The design thermal conductivity coefficient (used for designing purposes and corresponding to the conditions of material application) reaches the following values depending on the partition's temperature:

Table 2. Thermal conductivity coefficients

Average temperature of a partition $t_{śr}$ [°C]	Thermal conductivity coefficient λ_{obl} [W/m°C]
10	0,023
5	0,022
0	0,022
-5	0,021

The values of heat-transfer coefficients U_c of partitions made of BALEXTHERM-PU-F sandwich panels taking linear thermal bridges occurring in the panels' contact area into consideration are available in Table 4. Due to the application of special insulating fasteners for fastening BALEXTHERM-PU-F panels the zero value of the point heat-transfer coefficient was assumed in relation to these panels.

Table 3. Internal wall's heat-transfer coefficients

Panel type	Panel's thickness [mm]	Internal wall's heat-transfer coefficient Uc [W/m²K]
BALEXTHERM-PU-F 120	120	0,18
BALEXTHERM-PU-F 160	160	0,14
BALEXTHERM-PU-F 180	180	0,12
BALEXTHERM-PU-F 200	200	0,11

Table 4. Heat flux density

Heat flux density								
Lp.	Temperature difference Δt	Panel type						
		PU-W-ST 60(*)	PU-W-ST 80(*)	PU-W-ST 100(*)	PU-F 120	PU-F 160	PU-F 180	PU-F 200
		Heat-transfer coefficient						
		0,36	0,27	0,22	0,18	0,14	0,12	0,11
	[°C]	[W / m²K]						
1	10	3,60	2,70	2,20	1,80	1,40	1,20	1,10
2	15	5,40	4,05	3,30	2,70	2,10	1,80	1,65
3	20	7,20	5,40	4,40	3,60	2,80	2,40	2,20
4	25	9,00	6,75	5,50	4,50	3,50	3,00	2,75
5	30	10,80	8,10	6,60	5,40	4,20	3,60	3,30
6	35	12,60	9,45	7,70	6,30	4,90	4,20	3,85
7	40	14,40	10,80	8,80	7,20	5,60	4,80	4,40
8	45	16,20	12,15	9,90	8,10	6,30	5,40	4,95
9	50	18,00	13,50	11,00	9,00	7,00	6,00	5,50
10	55	19,80	14,85	12,10	9,90	7,70	6,60	6,05
11	60	21,60	16,20	13,20	10,80	8,40	7,20	6,60
12	65	23,40	17,55	14,30	11,70	9,10	7,80	7,15
13	70	25,20	18,90	15,40	12,60	9,80	8,40	7,70
14	75	27,00	20,25	16,50	13,50	10,50	9,00	8,25
15	80	28,80	21,60	17,60	14,40	11,20	9,60	8,80
16	85	30,60	22,95	18,70	15,30	11,90	10,20	9,35
17	90	32,40	24,30	19,80	16,20	12,60	10,80	9,90
18	95	34,20	25,65	20,90	17,10	13,30	11,40	10,45
19	100	36,00	27,00	22,00	18,00	14,00	12,00	11,00
With colour			is marked suggested range of appliance.					
(*) ATTENTION: BALEXTHERM-PU-W-ST sandwich panels are presented in the BALEXTHERM-PU-W-ST, BALEXTHERM-PU-W-PLUS, BALEXTHERM-PU-R catalogue of sandwich panels								

The above table specifies the partition's thermal performance in W/m² depending on the panel's thickness and temperature difference Δt [K] between the temperature inside the chamber t_w and the analytical outdoor temperature $t_{z.obl}$ for the building's location area. The outdoor analytical temperature is calculated on the basis of the following formula:

$$t_{z.obl} = 0{,}40\ t_{av.m} + 0{,}60\ t_{max}$$

where:
$t_{av.m}$ - is the average temperature of the hottest month of the year
t_{max} –is the average maximum temperature of outdoor year in the building's location area.

To make things easier it can be assumed that outdoor temperature equals $t_{z.obl}$ = +35°C.
A designer adjusts required partition's thermal performance whereas the recommended thermal performance should be lower than 10 W/m².

An example of adjusting panel's thickness:
Temperature inside the chamber -30°C
Outdoor temperature +35°C

Δt = 65°C

We check in a column with Δt 65 for what panel's thickness the density of the heat flux does not exceed 10 W/m². This condition is met by BALEXTHERM-PU-F 160 panels that are at least 160 mm thick and their heat flux value is 9.10 W/m².

11. STRENGTH

These tables have been compiled according to the methodology of PN-EN 14509:2013 Annex E, Design Procedures and apply to the maintenance of safety of a structure defined in the Technical Requirements referred to below.

Pursuant to the Polish Regulation of the Ministry of Infrastructure of 12 April 2002 (Dz.U.75.2002 item 690, published as a consolidated text in Dz.U. Year 2015, item 1422) on the technical requirements of buildings and locations thereof, the design and execution of building structures and their components must consider the structural safety criterion. Division V titled "Structural safety § 204" defines what is the structural safety of buildings and their components.

1. Given the aforementioned guidelines, the following assumptions have been input to compile the load capacity and rigidity tables for the BALEXTHERM composite panels:

a) Ultimate limit state (ULS): which is deemed exceeded when the actual load exceeds the permissible failure load.

b) Serviceability limit state (SLS): in the case of the composite panels, this is their rigidity, which is deemed exceeded if the deflection of the wall and roof-installed panels exceeds 1/200 of the span width under a transient load or 1/100 of the span width under a long-term load.

2. The scope of application of the BALEXTHERM PU-F panels shall meet the appended tables in terms of load capacity and rigidity. The permissible load values in the table include the following:

a) the effects of the thermal loads caused by the temperature difference between the outer and inner cladding (the assumed temperatures meet PN-EN 14509: t_{in} = +25°C in summer and t_{in} = +20°C in winter, complete with the standard temperatures at the outer cladding). The following temperature differences are assumed for thermal loads:
Δt = 35° C, Group I
Δt = 45° C, Group II
Δt = 60° C, Group III

b) the least favourable combination of loads

3. The maximum ULS and SLS loads shall be compared to characteristic loads.

4. The maximum loads listed in the tables have been determined for the following panel colour groups: Group I – very light colours; Group II – light colours; and Group III – dark colours.

5. It is recommended to install the panels at ambient temperatures equal to or higher than +10° C. Installing panels with dark colour cladding at low temperatures will increase the effects of thermal loads in summer. Balex recommends installing dark colour panels in single-span systems. Consult the Balex Design Office for the scope and requirements of application of dark colour panels.

6. Interpolation is permitted to determine the permissible loads for all spans not listed in the tables.

7. The tables specify the support width values for pressure; the wording "support" denotes the support width in millimetres (mm). The minimum width of edge support is 40mm, for inner support is 60mm.

Table 5. 1-span system: maximum characteristic loads of BALEXTHERM PU-F polyurethane core cold insulating composite panels in 0.50/0.50 mm thick cladding with microprofiling/lining; outer support width [mm] is specified under the load values
Direction of force: TOWARDS SUPPORT – PRESSURE

BALEXTHERM PU-F																																	
Core thickness	Colour group	Maximum characteristic load [kN/m²] at given span [m]																															
		2,00	2,25	2,50	2,75	3,00	3,25	3,50	3,75	4,00	4,25	4,50	4,75	5,00	5,25	5,50	5,75	6,00	6,25	6,50	6,75	7,00	7,25	7,50	7,75	8,00	8,25	8,50	8,75	9,00	9,25	9,50
120	I	4,33	3,85	3,46	3,15	2,88	2,66	2,47	2,31	2,16	2,03	1,92	1,82	1,73	1,65	1,57	1,50	1,44	1,38	1,33	1,23	1,14	1,06	0,99	0,93	0,87						
	support	70	70	70	70	70	70	70	70	70	70	70	70	70	70	70	70	70	70	70	68	65	63	60	60	60						
	II	4,33	3,85	3,46	3,15	2,88	2,66	2,47	2,31	2,16	2,03	1,92	1,82	1,73	1,65	1,57	1,50	1,44	1,38	1,33	1,23	1,14	1,06	0,99	0,93	0,87						
	support	70	70	70	70	70	70	70	70	70	70	70	70	70	70	70	70	70	70	70	68	65	63	60	60	60						
	III	4,33	3,85	3,46	3,15	2,88	2,66	2,47	2,31	2,16	2,03	1,92	1,82	1,73	1,65	1,57	1,50	1,44	1,38	1,33	1,23	1,14	1,06	0,99	0,93	0,87						
	support	70	70	70	70	70	70	70	70	70	70	70	70	70	70	70	70	70	70	70	68	65	63	60	60	60						
160	I	4,33	3,85	3,46	3,15	2,88	2,66	2,47	2,31	2,16	2,03	1,92	1,82	1,73	1,65	1,57	1,50	1,44	1,38	1,33	1,28	1,23	1,19	1,15	1,09	1,02						
	support	70	70	70	70	70	70	70	70	70	70	70	70	70	70	70	70	70	70	70	70	70	70	70	69	66						
	II	4,33	3,85	3,46	3,15	2,88	2,66	2,47	2,31	2,16	2,03	1,92	1,82	1,73	1,65	1,57	1,50	1,44	1,38	1,33	1,28	1,23	1,19	1,15	1,09	1,02						
	support	70	70	70	70	70	70	70	70	70	70	70	70	70	70	70	70	70	70	70	70	70	70	70	69	66						
	III	4,33	3,85	3,46	3,15	2,88	2,66	2,47	2,31	2,16	2,03	1,92	1,82	1,73	1,65	1,57	1,50	1,44	1,38	1,33	1,28	1,23	1,19	1,15	1,09	1,02						
	support	70	70	70	70	70	70	70	70	70	70	70	70	70	70	70	70	70	70	70	70	70	70	70	69	66						
180	I				3,15	2,88	2,66	2,47	2,31	2,16	2,03	1,92	1,82	1,73	1,65	1,57	1,50	1,44	1,38	1,33	1,28	1,23	1,19	1,15	1,11	1,07	1,00	0,95	0,89	0,84		
	support				70	70	70	70	70	70	70	70	70	70	70	70	70	70	70	70	70	70	70	70	70	70	67	66	63	62		
	II				3,15	2,88	2,66	2,47	2,31	2,16	2,03	1,92	1,82	1,73	1,65	1,57	1,50	1,44	1,38	1,33	1,28	1,23	1,19	1,15	1,11	1,07	1,00	0,95	0,89	0,84		
	support				70	70	70	70	70	70	70	70	70	70	70	70	70	70	70	70	70	70	70	70	70	70	67	66	63	62		
	III				3,15	2,88	2,66	2,47	2,31	2,16	2,03	1,92	1,82	1,73	1,65	1,57	1,50	1,44	1,38	1,33	1,28	1,23	1,19	1,15	1,11	1,07	1,00	0,95	0,89	0,84		
	support				70	70	70	70	70	70	70	70	70	70	70	70	70	70	70	70	70	70	70	70	70	70	67	66	63	62		
200	I					2,88	2,66	2,47	2,31	2,16	2,03	1,92	1,82	1,73	1,65	1,57	1,50	1,44	1,38	1,33	1,28	1,23	1,19	1,15	1,11	1,08	1,03	0,97	0,92	0,87	0,82	0,78
	support					70	70	70	70	70	70	70	70	70	70	70	70	70	70	70	70	70	70	70	70	70	69	67	66	64	62	60
	II					2,88	2,66	2,47	2,31	2,16	2,03	1,92	1,82	1,73	1,65	1,57	1,50	1,44	1,38	1,33	1,28	1,23	1,19	1,15	1,11	1,08	1,03	0,97	0,92	0,87	0,82	0,78
	support					70	70	70	70	70	70	70	70	70	70	70	70	70	70	70	70	70	70	70	70	70	69	67	66	64	62	60
	III					2,88	2,66	2,47	2,31	2,16	2,03	1,92	1,82	1,73	1,65	1,57	1,50	1,44	1,38	1,33	1,28	1,23	1,19	1,15	1,11	1,08	1,03	0,97	0,92	0,87	0,82	0,78
	support					70	70	70	70	70	70	70	70	70	70	70	70	70	70	70	70	70	70	70	70	70	69	67	66	64	62	60

BALEXMETAL

Table 6. 2-span system: maximum characteristic loads of BALEXTHERM PU-F polyurethane core cold insulating composite panels in 0.50/0.50 mm thick cladding with microprofiling/lining; inner support width [mm] is specified under the load values; 40mm outer support
Direction of force: TOWARDS SUPPORT – PRESSURE

BALEXTHERM PU-F																																	
Core thickness	Colour group	Maximum characteristic load [kN/m²] at given span [m]																															
		2,00	2,25	2,50	2,75	3,00	3,25	3,50	3,75	4,00	4,25	4,50	4,75	5,00	5,25	5,50	5,75	6,00	6,25	6,50	6,75	7,00	7,25	7,50	7,75	8,00	8,25	8,50	8,75	9,00	9,25	9,50
120	I	2,16	1,92	1,73	1,57	1,44	1,27	0,88	0,63	0,45	0,33	0,24	0,17	0,12	0,09	0,06	0,04	0,02	0,02	0,02	0,02											
	support	70	70	70	70	70	67	60	60	60	60	60	60	60	60	60	60	60	60	60	60											
	II	2,16	1,92	1,73	1,57	1,44	1,27	0,88	0,63	0,45	0,33	0,24	0,17	0,12	0,09	0,06	0,04	0,02	0,02	0,02	0,02											
	support	70	70	70	70	70	67	60	60	60	60	60	60	60	60	60	60	60	60	60	60											
	III	2,16	1,92	1,73	1,57	1,44	1,27	0,88	0,63	0,45	0,33	0,24	0,17	0,12	0,09	0,06	0,04	0,02	0,02	0,02	0,02											
	support	70	70	70	70	70	67	60	60	60	60	60	60	60	60	60	60	60	60	60	60											
160	I	2,16	1,92	1,73	1,57	1,44	1,33	1,23	1,15	1,08	1,01	0,81	0,62	0,49	0,38	0,30	0,24	0,19	0,15	0,11	0,09	0,07	0,05	0,04	0,03	0,02						
	support	70	70	70	70	70	70	70	70	70	70	60	60	60	60	60	60	60	60	60	60	60	60	60	60	60						
	II	2,16	1,92	1,73	1,57	1,44	1,33	1,23	1,15	1,08	1,01	0,81	0,62	0,49	0,38	0,30	0,24	0,19	0,15	0,11	0,09	0,07	0,05	0,04	0,03	0,02						
	support	70	70	70	70	70	70	70	70	70	70	60	60	60	60	60	60	60	60	60	60	60	60	60	60	60						
	III	2,16	1,92	1,73	1,57	1,44	1,33	1,23	1,15	1,08	1,01	0,81	0,62	0,49	0,38	0,30	0,24	0,19	0,15	0,11	0,09	0,07	0,05	0,04	0,03	0,02						
	support	70	70	70	70	70	70	70	70	70	70	60	60	60	60	60	60	60	60	60	60	60	60	60	60	60						
180	I				1,57	1,44	1,33	1,23	1,15	1,08	1,01	0,96	0,83	0,65	0,51	0,40	0,32	0,26	0,21	0,16	0,13	0,10	0,08	0,06	0,05	0,04	0,03	0,02	0,02	0,02		
	support				70	70	70	70	70	70	70	70	64	60	60	60	60	60	60	60	60	60	60	60	60	60	60	60	60	60		
	II				1,57	1,44	1,33	1,23	1,15	1,08	1,01	0,96	0,83	0,65	0,51	0,40	0,32	0,26	0,21	0,16	0,13	0,10	0,08	0,06	0,05	0,04	0,03	0,02	0,02	0,02		
	support				70	70	70	70	70	70	70	70	64	60	60	60	60	60	60	60	60	60	60	60	60	60	60	60	60	60		
	III				1,57	1,44	1,33	1,23	1,15	1,08	1,01	0,96	0,83	0,65	0,51	0,40	0,32	0,26	0,21	0,16	0,13	0,10	0,08	0,06	0,05	0,04	0,03	0,02	0,02	0,02		
	support				70	70	70	70	70	70	70	70	64	60	60	60	60	60	60	60	60	60	60	60	60	60	60	60	60	60		
200	I					1,44	1,33	1,23	1,15	1,08	1,01	0,96	0,91	0,83	0,66	0,53	0,42	0,34	0,27	0,22	0,18	0,14	0,12	0,09	0,07	0,06	0,05	0,04	0,03	0,02	0,02	0,02
	support					70	70	70	70	70	70	70	70	68	60	60	60	60	60	60	60	60	60	60	60	60	60	60	60	60	60	60
	II					1,44	1,33	1,23	1,15	1,08	1,01	0,96	0,91	0,83	0,66	0,53	0,42	0,34	0,27	0,22	0,18	0,14	0,12	0,09	0,07	0,06	0,05	0,04	0,03	0,02	0,02	0,02
	support					70	70	70	70	70	70	70	70	68	60	60	60	60	60	60	60	60	60	60	60	60	60	60	60	60	60	60
	III					1,44	1,33	1,23	1,15	1,08	1,01	0,96	0,91	0,83	0,66	0,53	0,42	0,34	0,27	0,22	0,18	0,14	0,12	0,09	0,07	0,06	0,05	0,04	0,03	0,02	0,02	0,02
	support					70	70	70	70	70	70	70	70	68	60	60	60	60	60	60	60	60	60	60	60	60	60	60	60	60	60	60

Table 7. 3-span system: maximum characteristic loads of BALEXTHERM PU-F polyurethane core cold insulating composite panels in 0.50/0.50 mm thick cladding with microprofiling/lining; inner support width [mm] is specified under the load values; 40mm outer support
Direction of force: TOWARDS SUPPORT - PRESSURE

BALEXTHERM PU-F																																	
Core thickness	Colour group	Maximum characteristic load [kN/m²] at given span [m]																															
		2,00	2,25	2,50	2,75	3,00	3,25	3,50	3,75	4,00	4,25	4,50	4,75	5,00	5,25	5,50	5,75	6,00	6,25	6,50	6,75	7,00	7,25	7,50	7,75	8,00	8,25	8,50	8,75	9,00	9,25	9,50
120	I	2,16	1,92	1,73	1,57	1,44	1,33	1,23	1,01	0,84	0,71	0,60	0,52	0,45	0,40	0,35	0,32	0,28	0,26	0,23	0,21	0,20	0,18	0,17	0,16	0,14						
	support	70	70	70	70	70	70	70	62	60	60	60	60	60	60	60	60	60	60	60	60	60	60	60	60	60						
	II	2,16	1,92	1,73	1,57	1,44	1,33	1,23	1,01	0,84	0,71	0,60	0,52	0,45	0,40	0,35	0,32	0,28	0,26	0,23	0,21	0,20	0,18	0,17	0,16	0,14						
	support	70	70	70	70	70	70	70	62	60	60	60	60	60	60	60	60	60	60	60	60	60	60	60	60	60						
	III	2,16	1,92	1,73	1,57	1,44	1,33	1,23	1,01	0,84	0,71	0,60	0,52	0,45	0,40	0,35	0,32	0,28	0,26	0,23	0,21	0,20	0,18	0,17	0,16	0,14						
	support	70	70	70	70	70	70	70	62	60	60	60	60	60	60	60	60	60	60	60	60	60	60	60	60	60						
160	I	2,16	1,92	1,73	1,57	1,44	1,33	1,23	1,15	1,08	1,01	0,96	0,89	0,76	0,66	0,58	0,51	0,46	0,41	0,37	0,33	0,30	0,28	0,25	0,23	0,22						
	support	70	70	70	70	70	70	70	70	70	70	70	69	62	60	60	60	60	60	60	60	60	60	60	60	60						
	II	2,16	1,92	1,73	1,57	1,44	1,33	1,23	1,15	1,08	1,01	0,96	0,89	0,76	0,66	0,58	0,51	0,46	0,41	0,37	0,33	0,30	0,28	0,25	0,23	0,22						
	support	70	70	70	70	70	70	70	70	70	70	70	69	62	60	60	60	60	60	60	60	60	60	60	60	60						
	III	2,16	1,92	1,73	1,57	1,44	1,33	1,23	1,15	1,08	1,01	0,96	0,89	0,76	0,66	0,58	0,51	0,46	0,41	0,37	0,33	0,30	0,28	0,25	0,23	0,22						
	support	70	70	70	70	70	70	70	70	70	70	70	69	62	60	60	60	60	60	60	60	60	60	60	60	60						
180	I				1,57	1,44	1,33	1,23	1,15	1,08	1,01	0,96	0,91	0,86	0,79	0,69	0,61	0,54	0,48	0,43	0,39	0,35	0,32	0,29	0,27	0,25	0,23	0,21	0,20	0,19		
	support				70	70	70	70	70	70	70	70	70	70	67	62	60	60	60	60	60	60	60	60	60	60	60	60	60	60		
	II				1,57	1,44	1,33	1,23	1,15	1,08	1,01	0,96	0,91	0,86	0,79	0,69	0,61	0,54	0,48	0,43	0,39	0,35	0,32	0,29	0,27	0,25	0,23	0,21	0,20	0,19		
	support				70	70	70	70	70	70	70	70	70	70	67	62	60	60	60	60	60	60	60	60	60	60	60	60	60	60		
	III				1,57	1,44	1,33	1,23	1,15	1,08	1,01	0,96	0,91	0,86	0,79	0,69	0,61	0,54	0,48	0,43	0,39	0,35	0,32	0,29	0,27	0,25	0,23	0,21	0,20	0,19		
	support				70	70	70	70	70	70	70	70	70	70	67	62	60	60	60	60	60	60	60	60	60	60	60	60	60	60		
200	I					1,44	1,33	1,23	1,15	1,08	1,01	0,96	0,91	0,86	0,82	0,78	0,70	0,62	0,55	0,50	0,45	0,41	0,37	0,34	0,31	0,29	0,26	0,24	0,23	0,21	0,20	0,19
	support					70	70	70	70	70	70	70	70	70	70	70	66	61	60	60	60	60	60	60	60	60	60	60	60	60	60	60
	II					1,44	1,33	1,23	1,15	1,08	1,01	0,96	0,91	0,86	0,82	0,78	0,70	0,62	0,55	0,50	0,45	0,41	0,37	0,34	0,31	0,29	0,26	0,24	0,23	0,21	0,20	0,19
	support					70	70	70	70	70	70	70	70	70	70	70	66	61	60	60	60	60	60	60	60	60	60	60	60	60	60	60
	III					1,44	1,33	1,23	1,15	1,08	1,01	0,96	0,91	0,86	0,82	0,78	0,70	0,62	0,55	0,50	0,45	0,41	0,37	0,34	0,31	0,29	0,26	0,24	0,23	0,21	0,20	0,19
	support					70	70	70	70	70	70	70	70	70	70	70	66	61	60	60	60	60	60	60	60	60	60	60	60	60	60	60

BALEXMETAL

Table 8. 1-span system: maximum characteristic loads of BALEXTHERM PU-F polyurethane core cold insulating composite panels in 0.50/0.50 mm thick cladding with microprofiling/lining
Direction of force: FROM SUPPORT – SUCTION

BALEXTHERM PU-F																																			
Core thickness	Colour group	Maximum characteristic load [kN/m²] at given span [m]																																	
		1,50	1,75	2,00	2,25	2,50	2,75	3,00	3,25	3,50	3,75	4,00	4,25	4,50	4,75	5,00	5,25	5,50	5,75	6,00	6,25	6,50	6,75	7,00	7,25	7,50	7,75	8,00	8,25	8,50	8,75	9,00	9,25	9,50
120	I	-9,68	-8,25	-6,32	-4,99	-4,04	-3,34	-2,81	-2,39	-2,06	-1,79	-1,58	-1,40	-1,24	-1,12	-1,01	-0,91	-0,83	-0,76	-0,70	-0,65	-0,60	-0,55	-0,52	-0,48	-0,45								
	II	-9,68	-8,25	-6,32	-4,99	-4,04	-3,34	-2,81	-2,39	-2,06	-1,79	-1,58	-1,40	-1,24	-1,12	-1,01	-0,91	-0,83	-0,76	-0,70	-0,65	-0,60	-0,55	-0,52	-0,48	-0,45								
	III	-9,68	-8,25	-6,32	-4,99	-4,04	-3,34	-2,81	-2,39	-2,06	-1,79	-1,58	-1,40	-1,24	-1,12	-1,01	-0,91	-0,83	-0,76	-0,70	-0,65	-0,60	-0,55	-0,52	-0,48	-0,45								
160	I			-7,27	-6,47	-5,40	-4,47	-3,75	-3,20	-2,75	-2,40	-2,11	-1,87	-1,66	-1,49	-1,35	-1,22	-1,11	-1,02	-0,93	-0,86	-0,80	-0,74	-0,69	-0,64	-0,60	-0,56	-0,53						
	II			-7,27	-6,47	-5,40	-4,47	-3,75	-3,20	-2,75	-2,40	-2,11	-1,87	-1,66	-1,49	-1,35	-1,22	-1,11	-1,02	-0,93	-0,86	-0,80	-0,74	-0,69	-0,64	-0,60	-0,56	-0,53						
	III			-7,27	-6,47	-5,40	-4,47	-3,75	-3,20	-2,75	-2,40	-2,11	-1,87	-1,66	-1,49	-1,35	-1,22	-1,11	-1,02	-0,93	-0,86	-0,80	-0,74	-0,69	-0,64	-0,60	-0,56	-0,53						
180	I					-6,08	-5,03	-4,22	-3,60	-3,10	-2,70	-2,37	-2,10	-1,87	-1,68	-1,52	-1,38	-1,25	-1,15	-1,05	-0,97	-0,90	-0,83	-0,77	-0,72	-0,67	-0,63	-0,59	-0,56	-0,53				
	II					-6,08	-5,03	-4,22	-3,60	-3,10	-2,70	-2,37	-2,10	-1,87	-1,68	-1,52	-1,38	-1,25	-1,15	-1,05	-0,97	-0,90	-0,83	-0,77	-0,72	-0,67	-0,63	-0,59	-0,56	-0,53				
	III					-6,08	-5,03	-4,22	-3,60	-3,10	-2,70	-2,37	-2,10	-1,87	-1,68	-1,52	-1,38	-1,25	-1,15	-1,05	-0,97	-0,90	-0,83	-0,77	-0,72	-0,67	-0,63	-0,59	-0,56	-0,53				
200	I							-4,70	-4,00	-3,45	-3,00	-2,64	-2,34	-2,08	-1,87	-1,69	-1,53	-1,39	-1,27	-1,17	-1,08	-1,00	-0,92	-0,86	-0,80	-0,75	-0,70	-0,66	-0,62	-0,58	-0,55	-0,52	-0,49	-0,47
	II							-4,70	-4,00	-3,45	-3,00	-2,64	-2,34	-2,08	-1,87	-1,69	-1,53	-1,39	-1,27	-1,17	-1,08	-1,00	-0,92	-0,86	-0,80	-0,75	-0,70	-0,66	-0,62	-0,58	-0,55	-0,52	-0,49	-0,47
	III							-4,70	-4,00	-3,45	-3,00	-2,64	-2,34	-2,08	-1,87	-1,69	-1,53	-1,39	-1,27	-1,17	-1,08	-1,00	-0,92	-0,86	-0,80	-0,75	-0,70	-0,66	-0,62	-0,58	-0,55	-0,52	-0,49	-0,47

Table 9. 2-span system: maximum characteristic loads of BALEXTHERM PU-F polyurethane core cold insulating composite panels in 0.50/0.50 mm thick cladding with microprofiling/lining
Direction of force: FROM SUPPORT – SUCTION

BALEXTHERM PU-F																																			
Core thickness	Colour group	Maximum characteristic load [kN/m²] at given span [m]																																	
		1,50	1,75	2,00	2,25	2,50	2,75	3,00	3,25	3,50	3,75	4,00	4,25	4,50	4,75	5,00	5,25	5,50	5,75	6,00	6,25	6,50	6,75	7,00	7,25	7,50	7,75	8,00	8,25	8,50	8,75	9,00	9,25	9,50
120	I	-9,67	-8,25	-6,32	-4,99	-4,04	-3,34	-2,81	-2,39	-2,06	-1,79	-1,58	-1,40	-1,24	-1,12	-1,01	-0,91	-0,83	-0,76	-0,70	-0,65	-0,60	-0,55	-0,52	-0,48	-0,45								
	II	-9,67	-8,25	-6,32	-4,99	-4,04	-3,34	-2,81	-2,39	-2,06	-1,79	-1,58	-1,40	-1,24	-1,12	-1,01	-0,91	-0,83	-0,76	-0,70	-0,65	-0,60	-0,55	-0,52	-0,48	-0,45								
	III	-9,67	-8,25	-6,32	-4,99	-4,04	-3,34	-2,81	-2,39	-2,06	-1,79	-1,58	-1,40	-1,24	-1,12	-1,01	-0,91	-0,83	-0,76	-0,70	-0,65	-0,60	-0,55	-0,52	-0,48	-0,45								
160	I			-7,27	-6,46	-5,40	-4,47	-3,75	-3,20	-2,75	-2,40	-2,11	-1,87	-1,66	-1,49	-1,35	-1,22	-1,11	-1,02	-0,93	-0,86	-0,80	-0,74	-0,69	-0,64	-0,60	-0,56	-0,53						
	II			-7,27	-6,46	-5,40	-4,47	-3,75	-3,20	-2,75	-2,40	-2,11	-1,87	-1,66	-1,49	-1,35	-1,22	-1,11	-1,02	-0,93	-0,86	-0,80	-0,74	-0,69	-0,64	-0,60	-0,56	-0,53						
	III			-7,27	-6,46	-5,40	-4,47	-3,75	-3,20	-2,75	-2,40	-2,11	-1,87	-1,66	-1,49	-1,35	-1,22	-1,11	-1,02	-0,93	-0,86	-0,80	-0,74	-0,69	-0,64	-0,60	-0,56	-0,53						
180	I					-6,08	-5,03	-4,22	-3,60	-3,10	-2,70	-2,37	-2,10	-1,87	-1,68	-1,52	-1,38	-1,25	-1,15	-1,05	-0,97	-0,90	-0,83	-0,77	-0,72	-0,67	-0,63	-0,59	-0,56	-0,53				
	II					-6,08	-5,03	-4,22	-3,60	-3,10	-2,70	-2,37	-2,10	-1,87	-1,68	-1,52	-1,38	-1,25	-1,15	-1,05	-0,97	-0,90	-0,83	-0,77	-0,72	-0,67	-0,63	-0,59	-0,56	-0,53				
	III					-6,08	-5,03	-4,22	-3,60	-3,10	-2,70	-2,37	-2,10	-1,87	-1,68	-1,52	-1,38	-1,25	-1,15	-1,05	-0,97	-0,90	-0,83	-0,77	-0,72	-0,67	-0,63	-0,58	-0,53	-0,49				
200	I							-4,70	-4,00	-3,45	-3,00	-2,64	-2,34	-2,08	-1,87	-1,69	-1,53	-1,39	-1,27	-1,17	-1,08	-1,00	-0,92	-0,86	-0,80	-0,75	-0,70	-0,66	-0,62	-0,58	-0,55	-0,52	-0,49	-0,47
	II							-4,70	-4,00	-3,45	-3,00	-2,64	-2,34	-2,08	-1,87	-1,69	-1,53	-1,39	-1,27	-1,17	-1,08	-1,00	-0,92	-0,86	-0,80	-0,75	-0,70	-0,66	-0,62	-0,58	-0,55	-0,52	-0,49	-0,47
	III							-4,70	-4,00	-3,45	-3,00	-2,64	-2,34	-2,08	-1,87	-1,69	-1,53	-1,39	-1,27	-1,17	-1,08	-1,00	-0,92	-0,86	-0,80	-0,75	-0,70	-0,66	-0,62	-0,58	-0,55	-0,52	-0,49	-0,47

Table 10. 3-span system: maximum characteristic loads of BALEXTHERM PU-F polyurethane core cold insulating composite panels in 0.50/0.50 mm thick cladding with microprofiling/lining
Direction of force: FROM SUPPORT – SUCTION

BALEXTHERM PU-F																																			
Core thickness	Colour group	Maximum characteristic load [kN/m²] at given span [m]																																	
		1,50	1,75	2,00	2,25	2,50	2,75	3,00	3,25	3,50	3,75	4,00	4,25	4,50	4,75	5,00	5,25	5,50	5,75	6,00	6,25	6,50	6,75	7,00	7,25	7,50	7,75	8,00	8,25	8,50	8,75	9,00	9,25	9,50
120	I	-9,67	-8,25	-6,32	-4,99	-4,04	-3,34	-2,81	-2,39	-2,06	-1,79	-1,58	-1,40	-1,24	-1,12	-1,01	-0,91	-0,83	-0,76	-0,70	-0,65	-0,60	-0,55	-0,52	-0,48	-0,45								
	II	-9,67	-8,25	-6,32	-4,99	-4,04	-3,34	-2,81	-2,39	-2,06	-1,79	-1,58	-1,40	-1,24	-1,12	-1,01	-0,91	-0,83	-0,76	-0,70	-0,65	-0,60	-0,55	-0,52	-0,48	-0,45								
	III	-9,67	-8,25	-6,32	-4,99	-4,04	-3,34	-2,81	-2,39	-2,06	-1,79	-1,58	-1,40	-1,24	-1,12	-1,01	-0,91	-0,83	-0,76	-0,70	-0,65	-0,60	-0,55	-0,52	-0,48	-0,45								
160	I			-7,27	-6,46	-5,40	-4,47	-3,75	-3,20	-2,75	-2,40	-2,11	-1,87	-1,66	-1,49	-1,35	-1,22	-1,11	-1,02	-0,93	-0,86	-0,80	-0,74	-0,69	-0,64	-0,60	-0,56	-0,53						
	II			-7,27	-6,46	-5,40	-4,47	-3,75	-3,20	-2,75	-2,40	-2,11	-1,87	-1,66	-1,49	-1,35	-1,22	-1,11	-1,02	-0,93	-0,86	-0,80	-0,74	-0,69	-0,64	-0,60	-0,56	-0,53						
	III			-7,27	-6,46	-5,40	-4,47	-3,75	-3,20	-2,75	-2,40	-2,11	-1,87	-1,66	-1,49	-1,35	-1,22	-1,11	-1,02	-0,93	-0,86	-0,80	-0,74	-0,69	-0,64	-0,60	-0,56	-0,53						
180	I					-6,08	-5,03	-4,22	-3,60	-3,10	-2,70	-2,37	-2,10	-1,87	-1,68	-1,52	-1,38	-1,25	-1,15	-1,05	-0,97	-0,90	-0,83	-0,77	-0,72	-0,67	-0,63	-0,59	-0,56	-0,53				
	II					-6,08	-5,03	-4,22	-3,60	-3,10	-2,70	-2,37	-2,10	-1,87	-1,68	-1,52	-1,38	-1,25	-1,15	-1,05	-0,97	-0,90	-0,83	-0,77	-0,72	-0,67	-0,63	-0,59	-0,56	-0,53				
	III					-6,08	-5,03	-4,22	-3,60	-3,10	-2,70	-2,37	-2,10	-1,87	-1,68	-1,52	-1,38	-1,25	-1,15	-1,05	-0,97	-0,90	-0,83	-0,77	-0,72	-0,67	-0,63	-0,59	-0,56	-0,53				
200	I							-4,70	-4,00	-3,45	-3,00	-2,64	-2,34	-2,08	-1,87	-1,69	-1,53	-1,39	-1,27	-1,17	-1,08	-1,00	-0,92	-0,86	-0,80	-0,75	-0,70	-0,66	-0,62	-0,58	-0,55	-0,52	-0,49	-0,47
	II							-4,70	-4,00	-3,45	-3,00	-2,64	-2,34	-2,08	-1,87	-1,69	-1,53	-1,39	-1,27	-1,17	-1,08	-1,00	-0,92	-0,86	-0,80	-0,75	-0,70	-0,66	-0,62	-0,58	-0,55	-0,52	-0,49	-0,47
	III							-4,70	-4,00	-3,45	-3,00	-2,64	-2,34	-2,08	-1,87	-1,69	-1,53	-1,39	-1,27	-1,17	-1,08	-1,00	-0,92	-0,86	-0,80	-0,75	-0,70	-0,66	-0,62	-0,58	-0,55	-0,52	-0,49	-0,47

Table 11. Permissible span of BALEXTHERM-PU-F cold storage panels under tropical coat

	single-span				double-span			
core thickness [mm]	120	160	180	200	120	160	180	200
temperature inside the room [°C]	maximum span [m]							
+ 5	6,00	6,00	6,60	7,00	6,00	6,00	6,60	7,00
0	6,00	6,00	6,60	7,00	6,00	6,00	6,60	7,00
- 5	6,00	6,00	6,60	7,00	6,00	6,00	6,60	7,00
- 10	6,00	6,00	6,60	7,00	6,00	6,00	6,60	7,00
-15	6,00	6,00	6,60	7,00	5,70	6,00	6,60	7,00
- 20	-	6,00	6,60	7,00	-	5,30	5,60	5,90
- 25	-	6,00	6,60	7,00	-	4,50	4,80	5,00
- 30	-	6,00	6,60	7,00	-	4,00	4,20	4,50
- 40	-	-	6,60	7,00	-	-	3,50	3,70
- 50	-	-	-	7,00	-	-	-	3,30

Important: When analysing the pull-off-load, take into account the permissible load on a single fastener.

12. FIRE SAFETY

BALEXTHERM-PU-F polyurethane core sandwich panels are the building elements of a certain fire resistance class and so they should meet the requirements of fire resistance and fire dispersion specified in the Ordinance of the Minister for Infrastructure of 12th April 2002 on technical requirements for buildings and their location (Journal of Laws No. 75 pos. 690, 2002 as amended).

In accordance with § 216 and §272, external walls and roof coverings of buildings are subject to the following fire safety classifications:
- fire resistance
- fire dispersion degree.

BALEXTHERM-PU-F panels of 120 mm, 160 mm, 180 mm and 200 mm thickness have been classified as "non-dispersing fire" when exposed to it from the inside and the outside, in accordance to the fire dispersion from the inside and the outside PN 90/B-02867 standard "Fire protection of buildings: the method of testing the degree of fire dispersion through walls".

With regard to the tests according to the following standards
1. PN-EN ISO 11925-2 "Flammability of materials exposed to direct flames. Part 2: Tests with a single flame "
2. PN-EN 13823 "Tests of building products reaction to fire. Building products, excluding the floor ones, exposed to fire in the form of a single object on fire."
3. PN-EN 13501-1 "Fire classification of building products and elements of buildings. Part 1: Classification on the basis of tests checking reaction to fire", BALEXTHERM-PU-F panels with PIR core, of 120 - 200mm thickness have been classified as (the so-called Euroclass) B-s1, d0, whereas BALEXTHERM-PU-F with PUR core of 120-200mm thickness have been classified as (the so-called Euroclass) B-s2, d0 .

The B-s2, d0 classification enables application of BALEXTHERM-PU-F panels both for ceilings and screening walls according to technical requirements that should be met by buildings and their location as well as for non-flammable, not dripping and not dropping off when exposed to fire products and not spreading fire construction elements according to the Ordinance of the Minister of Infrastructure of 12th April 2002 (J. of L. no. 75 as of 15th June 2002 pos. 690).

Classification of fire resistance of non-carrying walls made of BALEXTHERM-PU-F preparwd on the basis of tests led in accordance with EN 13501-2:2007 norm is presented in table 12.

Table 12. Fire resistance classification of walls built of BALEXTHERM-PU-F sandwich panels.

Balextherm PIR					
Sandwich panel	Parameter	Distance between supports [mm]	Arrangement	Fire propagation of the wall with the fire acting from the inside and the outside	Reaction to fire
PU-F 120-180	E90/EW60	3 000	horizontal/vertical	Fire-resisting	B-s1,d0
	EI30	3 000	horizontal/vertical		
	EI15	4 000	horizontal/vertical		
		8 900	horizontal		
		12 000	horizontal[1]		
PU-F 200	EI60	3 000	horizontal/vertical		
	E60/EW60	4 865	horizontal		
		12 000	horizontal[1]		
	EI30/EW30	4 000	horizontal/vertical		
		12 000	horizontal		

Balextherm PUR					
Sandwich panel	Parameter	Distance between supports [mm]	Arrangement	Fire propagation of the wall with the fire acting from the inside and the outside	Reaction to fire
PU-F 120-200	E30/EW30 EI15	3 000	horizontal	Fire-resisting	B-s2,d0

1) sandwich panels stitched in joints with self-drilling fasteners 5,5x25 every 3000mm

NOTE
This classification applies to panels fastened through to the support structure with steel self-tapping fasteners

The applied load-bearing structure should be classified according to BALEXTHERM-PU-F classification as R15, R30, R60 or R90 as far as reaction to fire is concerned.

13. SOUND INSULATION PROPERTIES

BALEXTHERM-PU-F cold storage sandwich panels are characterized by the following sound parameters regardless of the thickness of steel claddings and the thickness of the polyurethane core.

Table 13. Noise reduction performance

Weighted index of the R_W specific sound insulation	Weighted assessment index of the specific sound insulation determined in relation to noise in R_{A1} ‚flat' spectrum.	Weighted assessment index of the specific sound insulation determined in relation to noise in R_{A2} low-frequency spectrum.
[dB]	[dB]	[dB]
25	23	21

BALEXTHERM-PU-F cold storage sandwich panels with a polyurethane core can be applied in industrial and commercial facilities and facilities similar to cold stores in case determined individual sound requirements do not exceed appropriate sound parameters of panels specified above.

14. CORROSION RESISTANCE

On the basis of tests carried out in the Building Research Institute in Warsaw in the Department of Durability and Protection of Buildings it has been stated that BALEXTHERM sandwich panels with a polyurethane core meet the requirements of EN ISO 12944-2 in the range of C1 to C5 class.

BALEXTHERM panels with claddings coated with a zinc layer and SP 25 or SP 35 organic coats or PVDF 25 or HPS200 or PCV(F) 120 on the front face side can be applied in environments with R1, R2 and R3 corrosion class, in the case of SP 15 coating on the face side in R1 and R2 environments according to the EN ISO 12944-2 standard.

BALEXTHERM panels with claddings protected with AZ185 aluzinc coating can be used in RC1, RC2 and RC3 corrosion class environments according to the EN ISO 12944-2 standard.

BALEXTHERM panels with claddings made of stainless steel and with claddings covered with a layer of zinc can be used in RC1, RC2, RC3 and RC4 corrosion class environments according to the EN ISO 12944-2 standard.

BALEXTHERM panels with claddings covered with a layer of zinc and CESAR PUR 55 layer can be used in RC1, RC2, RC3, RC4 and RC5 corrosion class environments according to the EN ISO 12944-2 standard.

Corrosion categories and examples of typical environments acc. to PN-EN ISO 12944-2.

C1 corrosion category
- interiors – heated buildings with clean ambience, e.g. offices, shops, schools, hotels

C2 corrosion category
- exteriors – ambiences of little contamination; mainly rural areas
- interiors – unheated buildings with possible condensation, e.g. warehouses, sports halls

C3 corrosion category
- exteriors – urban and industrial ambiences; average contamination with sulphur oxide (IV); water bank and shore areas of little salinity
- interiors – production interiors of high humidity and certain air pollution, e.g. food production facilities, laundries, breweries, milk production units

C4 corrosion category
- exteriors – industrial areas and water shore areas of moderate salinity
- interiors – chemical plants, swimming pools, ship repair yards for ships and boats.

C5 corrosion category
- exteriors – industrial areas of high humidity and aggressive ambience
- interiors – building structures or areas with virtually constant condensation and high contamination levels

For sandwich panels BALEXTHERM can be used coatings C5 corrosion class declared by manufacturer.

15. MATERIAL AND CLADDING COATINGS

15.1. Material

S220GD+ZINC, S250GD+ ZINC, S280GD+ ZINC STEEL (acc. EN 10326)

- carbon steel with increased parameters, galvanized on both sides and permanently secured with anti-corrosion coating
- metal sheet thickness: 0.40 – 0.70 mm
- coated with organic and metallic coatings

STAINLESS STEEL (1.4301) (acc. to EN10088-1)

- high-quality specialist steel with increased corrosion resistance
- metal sheet thickness: 0.50 mm
- material for food processing industry, warehousing and transport of food, cold stores, mushroom-growing cellars, agricultural facilities

15.2. Coatings

PREMIUM offer

CESAR PUR 55® - unequalled durability and vitality

- polyurethane coating with polyamid of overall thickness 55 µm
- extraordinary resistance for corrosion – RC5
- unequalled durability –up to 30 yaers depending on the environment
- very good resistance to intensiveUV radiation – RUV4
- solution for standard, demanding and agressive environments
- high scratch resistance
- the colour looks good and is stable for the full cycle of use
- for scratches on roof coverings, wall claddings, standard as well as aggressive and demanding environments: cold, damp, high UV radiation, industrial and contaminated environments
- colours: 3009, 8004, 8017, 9006, 9007, 7016, 9005, 9010

Standard offer

POLYESTER

- for outdoor applications - coating thickness 25 µm: resistant to changing temperature and weather conditions, good corrosion resistance,
- for indoor applications coating thickness 15 µm: indoor layers of walls and roofs
- colour scheme according to the Balex Metal World of Colours palette

POLYESTER MATT PEARL

- coating thickness 35 µm,
- for outdoor applications: resistant to changing temperature and weather conditions, good corrosion resistance,
- perfectly suitable for roofs of commercial and industrial facilities,
- colour scheme according to the Balex Metal World of Colours palette

Offer to special orders:

PVDF, Prisma, HPS200ultra

- coating thickness 25µm,
- good resistance to corrosion and mechanical damage, exceptionally high colour endurance and resistance to fading (at a temperature of up to 110°C), can be formed easily and shows high hardness of surface that prevents dirt accumulation and loss of gloss,
- especially recommended for outdoor applications (building's external wall claddings),
- colour scheme according to the Balex Metal World of Colours palette

PCV(F) „food safe"

- coating thickness 120µm,
- white foil,
- special coating with increased hardness,
- it can be applied in food processing facilities and cold stores, easily washable and resistant to the majority of cleaning agents.

ALUZINC + Easyfilm®

- metallic coating : 150 and 185 g/m^2 basis weight for each side of the sheet,
- thickness of the coating - 20 µm (for 150 g/m^2), 25 µm (for 185 g/m^2),
- double-sided thermally applied coating in a continuous process, additionally protected with a thin organic coating SPT (Special Protection Treatment), Easyfilm® (environmentally friendly, thin organic layer which protects aluzinc coating against discoloration,
- resistance to higher temperatures, high corrosive resistance, excellent heat and light reflection, good abrasive resistance

16. PROFILE TYPE COMBINATIONS

Table 14. Profile type combinations

Panel type	External cladding				Internal cladding	
	L	M	G	C	L	G
BALEXTHERM-PU-F	●	●	●*	●**	●	●*

** G profiling available only for minimum 0,50mm panel thickness,*
*** C profiling available for 0,50mm and 0,60mm panel thickness (production only at the production plant in Bolszewo)*

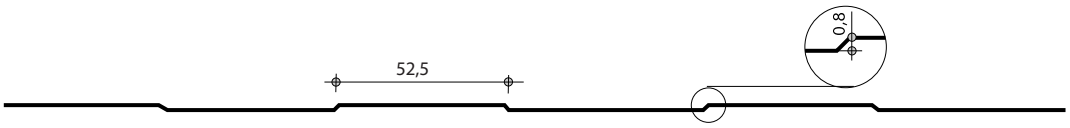

L = LINED

M = MICROPROFILED
Available to special order

G = FLAT*

** G profiling available only for minimum 0,50mm panel thickness*

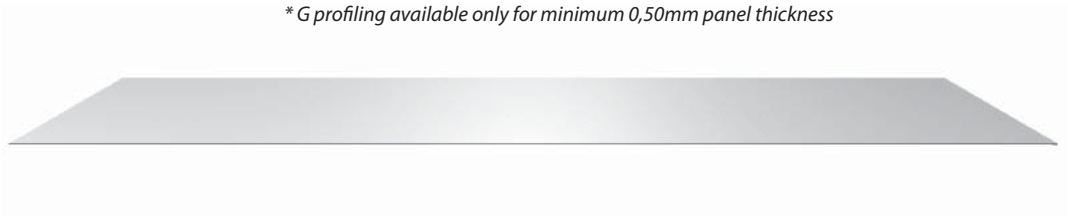

C = CLEARLINE**

*** C profiling available for 0,50mm and 0,60mm panel thickness*
(production only at the production plant in Bolszewo)

17. CLADDING COLOUR SCHEME

Table 15. Colour combinations

Colour scheme			External claddings	Internal claddings
SP - Polyester				
9010		white	●	●
9002		grey-white	●	●

Due to the specificity of cold storage facilities, the above colours are recommended. If cold storage panels are used as walls of halls, where the direction of the wind load impact is towards the support and we do not take into account heat load, other colours can be chosen from the Balex Metal colour palette.

18. GENERAL GUIDELINES ON ASSEMBLY

Before starting assembly it is recommended that one should verify the load-bearing structure in terms of precision of performance and its accordance with the design. Special attention should be paid to the quality of anti-corrosion and varnish coating of the load-bearing structure and additional elements like transoms and purlins as well as the quality of joints.

BALEXTHERM-PU-F panels are secured against dirt and damage with a protective film applied to claddings in the production process.

It is recommended to remove the protective film from claddings which are to form the internal side in a building before fastening them to the structure. In the case of external claddings the protective film should be removed within 1 month from the date of panels' production. It will prevent both the foil from binding permanently with protective varnish of claddings and varnish from getting dirty while removing the foil.

In the case of BALEXTHERM-PU-F sandwich panels which are symmetrical in shape, in order to avoid mistakes in identifying the external and internal side in the production process, a special label is placed under foil. The label indicates the external side of a panel along with the recommended date of removing the protective foil.

For BALEXTHERM-PU-F panels with both claddings in the same colour, it is possible to fix panels depending on the assembler's preference.

In order to prevent varnish coating from being damaged it is recommended to cut panels and flashings on stands covered with soft material e.g. felt.

Panels should be cut with the use of a cutting saw with small tooth blades and flashings with the use of hand scissors.

It is forbidden to use angle grinders and other tools heating up claddings in the process of cutting – it can lead to damaging anti-corrosion coating.

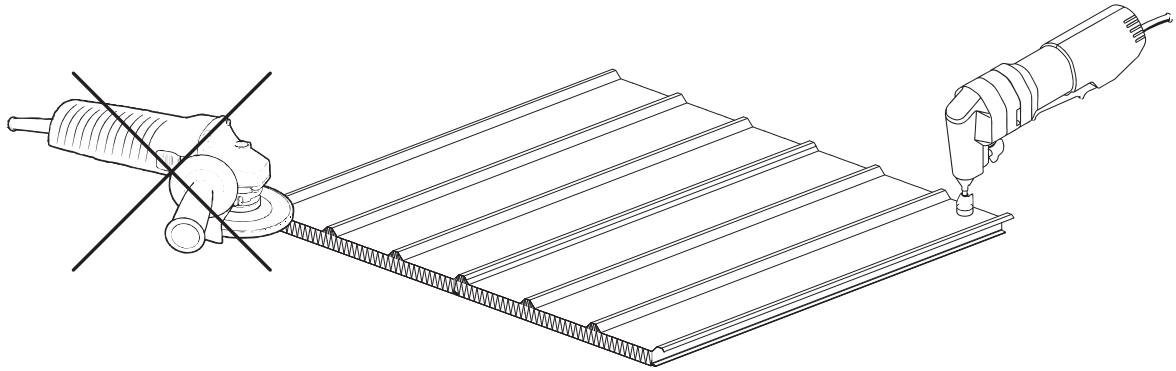

Fig. 7. Tools for cutting sandwich panels

It is recommended to fix BALEXTHERM-PU-F sandwich panels with the use of fastening systems described in this catalogue and the types of fastening elements and their indexes, depending on the thickness of panels are specified in the catalogue of accessories.

For screwing in self-drilling and self–tapping fasteners (application of stainless steel fasteners is recommended) the application of electrical tools is recommended. Screwdrivers should be equipped with an appropriate head for driving long fasteners and a depth limiter fig.7 That guarantees appropriate assembly i.e. maintaining perpendicular location of a particular fastener in relation to a panel, minimised risk of damaging panels' surface and tightness of the fastening.

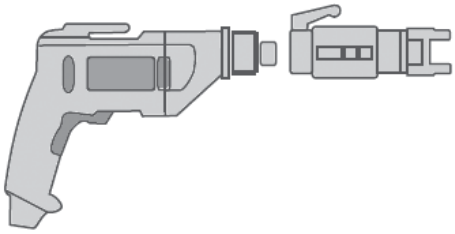

Fig. 8. Screwdriver with a driving head for long bolts.

Optimal parameters of electrical tools for assembling sandwich panels are provided by the information below:

power	600 - 750	W
rotation	1500 - 200	rpm
torque	600 - 700	Ncm

Application of other fastening systems requires consultation with the producer in order to establish appropriate correlation between the load-bearing capacity of panels and fasteners.
After finishing each work cycle you should carefully remove all steel waste and filings that can cause discolouration of the surface of a cladding. The whole enclosure should be sealed with the use of polyurethane foam and appropriate permanently plastic sealers (see figures of construction details). All damages to varnish on cladding sheets caused during assembly should be secured with touch up varnish.

It is recommended that in the case of external walls BALEXTHERM-PU-F panels should be fixed vertically. Before assembly self-adhesive PVC or PE tape should be applied to the surface of the load-bearing structure in the contact area with sandwich panels. Assembly and transport of panels should be performed with due caution to prevent varnish coating from being damaged. While transporting or positioning panels on the building structure you should pay attention not to damage the noses of panels (especially tongues) which can hamper assembly and even lead to damaging the external surface of panels.

19. INSTRUCTIONS ON MAKING HOLES IN BALEXTHERM

While planing the cuts of sandwich panels on facades and the roof, proper arrangement of window and door openings should be taken into account, as making openings obviously makes the load bearing capacity of the product weaker. Despite an opening, the sandwich panel must still bear the loads affecting it. If this is impossible, e.g. due to the size of the opening, it is recommended that an additional sub-structure is made to re-distribute the loads to load bearing profiles. In such cases, the final decision should be made by a duly licensed designer.

Small openings in BALEXTHERM panels (e.g. for cable passages) may be made without any reservations. It is permissible to make openings in wall and roof panels for passages of round and rectangular pipes and cables, of maximum diameter d=300mm; however, at least 200mm of space must be maintained between the panel edge and passage opening. The opening should be sealed with flexible pipe sealing compound.

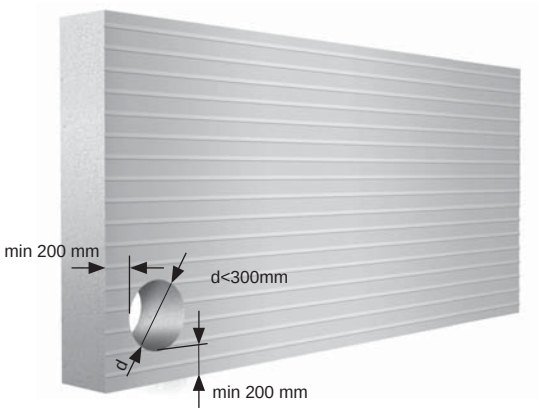

Fig. 9. Guidelines on making small openings in BALEXTHERM-PU panels

It is also permissible to make openings for PCV and aluminium windows in single panels, of maximum window dimensions: 700mm width. x 800mm height, mounted to the wall panel. Framing of the opening should be made of C-bars of (A-10)x30x3mm (where A – size of the cut opening) and mounted between the claddings. The wall space of 200mm width between the panel edge and the opening should be maintained. The designer is responsible for arranging the location of the opening in relation to the supports (transoms) and selecting their span in such a way that the deflection of panels does not exceed L/100 value.

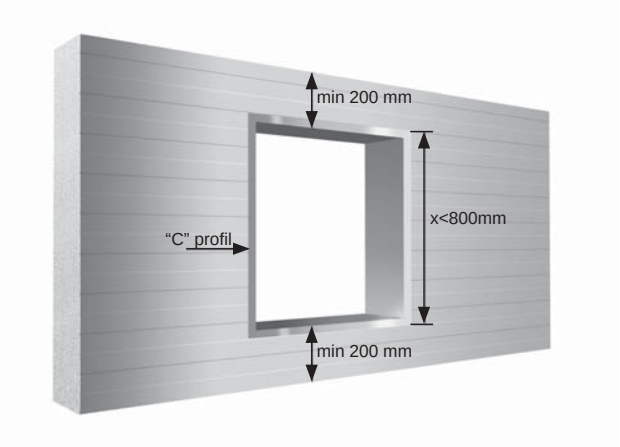

Fig. 10. Guidelines on making openings in BALEXTHERM-PU panels

Proceed with great care while making the opening. In order to avoid damaging the colour of the claddings, the panels should be cut on stands covered with soft material (felt, polyester). You may use a special opening maker mounted to the drill to make cuts. Using angle grinders or any other tools generating high cutting temperature is forbidden.

20. GUIDELINES

Recommended means of transport and its technical conditions:

Lorries with an open load-carrying body or an open trailer enabling loading long panels (up to 13.60 running metres) from both sides of a car constitute the basic means of transport for sandwich panels.
The following technical conditions are recommended for vehicles for transporting sandwich panels:

- load-carrying body with canvas cover (‚CURTAIN' type)
- load-carrying body longer than transported panels (a package of panels should be placed on the platform in its entire length)
- transport belts holding the load should be placed on a package of panels on each support (belt tension can deform panels)

How to pack sandwich panels:

The number of sandwich panels in a package depends on the type and the thickness of a single panel (the standard height of a package is ~1100 mm)

Table 16. Packing BALEXTHERM-PU-F panels

Panel thickness [mm]	Package height	Number of pieces per package
	[mm]	[pcs.]
BALEXTHERM-PU-F 120	1160	9
BALEXTHERM-PU-F 160	1200	7
BALEXTHERM-PU-F 180	1160	6
BALEXTHERM-PU-F 200	1080	5

The weight of a package is calculated taking the quantity and the length of individual panels in a package as well as the weight of 1m^2 of the panel acc. to Table 18. into consideration

Unloading, transport:

Check if the package is complete and specify any possible inconsistencies immediately upon delivery.

For packages up to 6m it is permissible to use forklift trucks of adjustable fork width, min. fork span 2m at min. width 150mm. While unloading the products with forklift trucks, pay particular attention to fork length and thickness, so as not to damage the second row of products in the vehicle and the upper cladding of lower packages.

Manual unloading is permissible for products of up to 6m length, when taken down one by one, and with special caution. **Dragging the products on the floor and on one another is forbidden.**

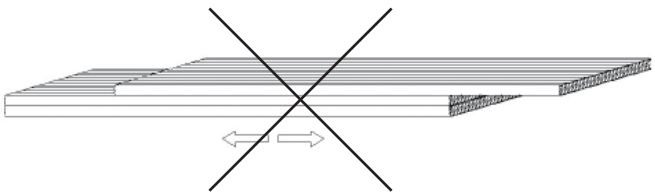

Packages of products longer than 6m must be lifted on transport belts by means of a spreader beam. Recommended belt span for packages from 6m to 12m is 2-4m at their min. width 200mm. For packages of over 12m length , transport belt span is 3,5-4,5m, at their min. width 200mm. It is recommended that the belts are placed on distance pads of min. 300mm width and min. 25mm thickness, on the upper and lower package panel. **Using suspensions from steel lines or chains is forbidden. It is inadmissible to lift the packages on clamping or crossing belts, or using any other methods that might damage the product.**

Unloading sandwich panels with a spreader beam:

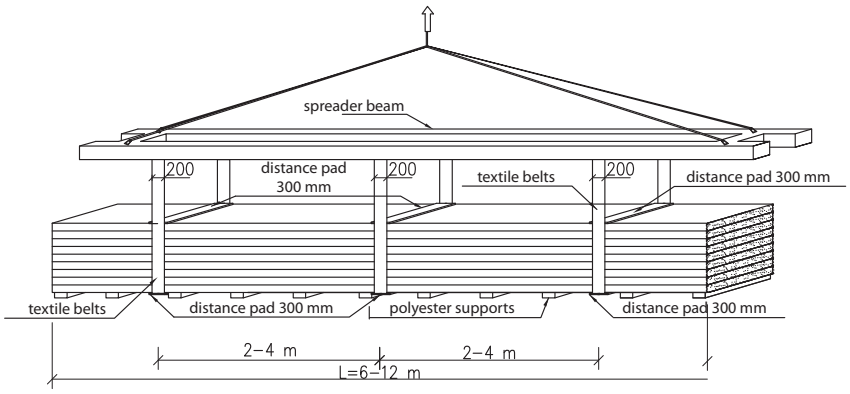

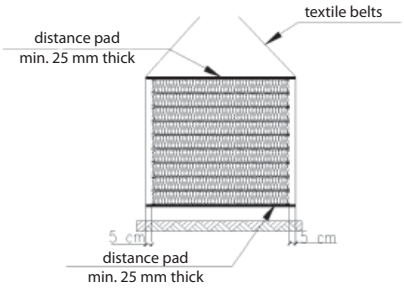

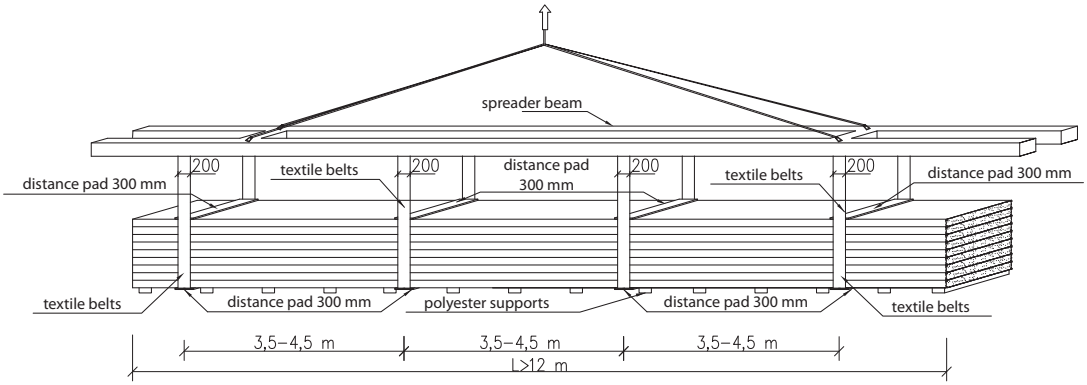

Panel storage:

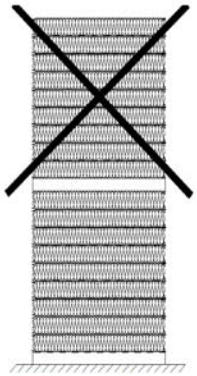
Even surface

Packages should be stored on flat ground with a slight inclination, to make sure all the pads lie on the surface precisely and rainwater is drained from the areas in between the packages. **Stacking packages one on the other is not allowed.**

Storing in closed, airy spaces is recommended, at normal temperatures, away from acids, lye, and other corrosive substances. When stored in the open air, the packages must be secured against rain and dirt by means of tarpaulins that give access to air flow. Remove the protective film from the product **no later than after 3 weeks of the date of production**.

Small repairs and maintenance:

All damage to coating caused during transport or assembly should be covered with touch up paint. Maintenance of sandwich panels consists in performing regular inspections and securing potential damages. During inspection close attention should be paid to uncovered edges and joints.

21. CERTIFICATION DOCUMENTS

BALEXMETAL
BUDUJEMY RAZEM
WE BUILD TOGETHER

DECLARATION OF PERFORMANCE
NO. 071/3/14509/BALEXTHERM PU-F PIR

1	**Unique identification code of the product-type**	Sandwich panels with a core of rigid polyisocyanurate foam in double-sided metal cladding BALEXTHERM PU-F PIR
2	**Type, batch or serial number or any other element allowing identification of the product**	Information identifying batches of the product - on the label of each product packaging, serial number on each panel Thickness of the product [mm]: 120, 160, 180, 200 Thermal insulation [kg/m^3]: PIR, density 40±3 Cladding: Steel 0.5-0.6 mm external; 0.5-0.6 mm internal Coating: SP, HDP, PVDF, PVC(P), PVC(F), PUR Steel grade: S250-280GD, 1.4301 Panel weight [kg/m^2]: 13.4(120); 15(160); 15.8(180); 16.8(200) Cladding profile: external L, M, G, internal L, G
3	**Intended use, in accordance with the applicable harmonized technical specification**	Sandwich panels with a core of rigid polyisocyanurate foam in double-sided metal cladding as walls of refrigeration and freezing chambers
4	**Name, contact address of the manufacturer**	**BALEX METAL Sp. z o.o.** ul. Wejherowska 12 C, 84-239 Bolszewo, Poland
5	**System of assessment and verification of constancy of performance**	System 3
6	**Identification of notified bodies**	Building Research Institute 1 Filtrowa, 00-611 Warsaw, Poland Notified body no. 1488 Reports: Reports: NK-02080/P/2009 Part 1, NK-02080/P/09 Part 2, NL-3196/A/05 Part 1, NL-3196/A/05 Part 2, NK-03568/2009, LPP02-0894/13/Z00NP, LPP02-2073/11/R06NP, FIRES, s.r.o 059-35 Batizovce, Slovakia Notified body no. 1396 Reports: Test report FIRES-FR-145-11-AUNE, Test report FIRES-FR-197-12-AUNE

BALEX METAL Sp. z o.o., CENTRALA 84-239 Bolszewo, ul. Wejherowska 12C, tel.: +48 58 778 44 44, fax: +48 58,778 44 55
e-mail: kontakt@balex.eu www.balex.eu www.thermano.eu NIP: PL 5881130299, KRS: 0000176277, REGON: 191112216

BALEXMETAL
BUDUJEMY RAZEM
WE BUILD TOGETHER

DECLARATION OF PERFORMANCE
NO. 031/3/14509/BALEXTHERM PU-F

1	**Unique identification code of the product-type**	Sandwich panels with a core of rigid polyurethane foam in double-sided metal cladding BALEXTHERM PU-F
2	**Type, batch or serial number or any other element allowing identification of the product**	Information identifying batches of the product - on the label of each product packaging, serial number on each panel Thickness of the product [mm]: 120, 160, 180, 200 Thermal insulation [kg/m^3]: PUR, density 40±3 Cladding: Steel 0.5-0.6 mm external; 0.5-0.6 mm internal Coating: SP, HDP, PVDF, PVC(P), PVC(F), PUR Steel grade: S250-280GD, 1.4301 Panel weight [kg/m^2]: 13.4(120); 15(160); 15.8(180); 16.8(200) Cladding profile: external L,M,G, internal L,G
3	**Intended use, in accordance with the applicable harmonized technical specification**	Sandwich panels with a core of rigid polyurethane foam in double-sided metal cladding as walls of refrigeration and freezing chambers
4	**Name, contact address of the manufacturer**	**BALEX METAL Sp. z o.o.** ul. Wejherowska 12 C, 84-239 Bolszewo, Poland
5	**System of assessment and verification of constancy of performance**	System 3
6	**Identification of notified bodies**	Building Research Institute 1 Filtrowa, 00-611 Warsaw, Poland Notified body no. 1488 Reports: NK-02080/P/2009 Part 1, NK-02080/P/09 Part 2, NL-3196/A/05 Part 1, NL-3196/A/05 Part 2, NK-03568/2009, LPP02-2073/11/R06NP, LP-1012/23-95/08, LPP01-2852/13/Z00NP FIRES, s.r.o 059-35 Batizovce, Slovakia Notified body no. 1396 Reports: Test report FIRES-FR-093-11-AUNE

BALEX METAL Sp. z o.o., CENTRALA 84-239 Bolszewo, ul. Wejherowska 12C, tel.: +48 58 778 44 44, fax: +48 58,778 44 55
e-mail: kontakt@balex.eu www.balex.eu www.thermano.eu NIP: PL 5881130299, KRS: 0000176277, REGON: 191112216

NATIONAL INSTITUTE OF PUBLIC HEALTH – NATIONAL INSTITUTE OF HYGIENE

24 Chocimska 00-791 Warsaw – Phone (22)5421354; (22)5421348 – Fax (22) 5421287 – e-mail: sek-zhk@pzh.gov.pl

HYGIENIC CERTIFICATE NO. HK/B/0098/02/2014

Product: **Sandwich panel in metal plates with polyurethane core – BALEXTHERM PU**

Containing: polyurethane, steel, coating: polyester/zinc/PVDF/PVC

Destined: used for construction of external and internal walls of building structures for the following facilities: industry, food, production, sports, office, commercial, services, administrative, public utility, health care (except for surgery rooms and intensive care units)

The product specified above meets the hygienic criteria when the following conditions are fulfilled:

In case of using the product in health care facilities, it has to meet the requirements of the Regulation of the Minister of Health dated June 26, 2012 (Journal of Laws no. 2012.739 dated June 29, 2012) on detailed requirements for the premises and equipment of entities conducting medical activity.
In case of panels with PVC plates, it is recommended that in the premises where people are constantly present, the coverage with this material does not exceed 50% of all construction areas.

Producer:
BALEX METAL Sp. z o.o.
84-239 Bolszewo
Ul. Wejherowska 12C

This certificate is issued for:
BALEX METAL Sp. z o.o.
84-239 Bolszewo
Ul. Wejherowska 12C

The certificate may be corrected or cancelled after appropriate motivation.
The certificate loses its validity after 2019-02-21
Or in case of changes in composition or in technology of production.

The date of issue of the certificate: 21st February 2014

Manager of hygiene institute
Garbas - on behalf of dr Bożena Krogulska

www.pzh.pl

Building Research Institute

CLASSIFICATION REPORT
OF REACTION TO FIRE
according to PN-EN 13501-1+A1:2010

Contract No.: 0894/13/Z00NP

Customer:	**BALEX METAL Sp. z o.o.** **ul. Wejherowska 12c** **84-239 Bolszewo**
Developed by:	**Fire Testing Department of the Building Research Institute, Filtrowa 1, 00-611 Warszawa**
Product name:	**Wall sandwich cooling panel** **BALEXTHERM PU-PIR-F**
Classification Report nr:	**0894.2/13/Z00NP**
Issue No.: 1	**Copy 1**
Date of publication:	**25.10.2013**

The Classification Report contains five pages and may be used or copied only as a whole.

1. Introduction
The Classification Report defines the classification attributed to the BALEXTHERM PU-PIR-F wall sandwich cooling panels according to the procedures stated in the PN-EN 13501-1+A1:2010 standard.
2. Detailed information on the product classified
2.1 General provisions
The product is defined as wall sandwich panels intended for light covering of industrial buildings, public buildings etc.

FIRES
The Experts on Fire Safety

RESISTANCE TO FIRE
EXTENDED APPLICATION REPORT

FIRES-ER-032-12-NURE

Name of the product: Wall made of sandwich panels BALEXTHERM-PU-F 200 mm with PIR core

Sponsor: BALEX METAL spolka z o.o.
ul.Wejherowska 12 C
84-239 Bolszewo
Poland

Prepared by: FIRES, s.r.o.
Approved Body No. SK01
Osloboditeľov 282
059 35 Batizovce
Slovak Republic

Notified Body No.: 1396

Task No.: PR-12-0386
Date of issue: 24. 10. 2012

Reports: 3
Copy No.: 2

Distribution list:

Copy No. 1 FIRES, s. r. o., Osloboditeľov 282, 059 35 Batizovce, Slovak Republic (electronic version)
Copy No. 2 BALEX METAL spolka z o.o., ul.Wejherowska 12 C, 84-239 Bolszewo, Poland (electronic version)
Copy No. 3 BALEX METAL spolka z o.o., ul.Wejherowska 12 C, 84-239 Bolszewo, Poland

This extended application report consists of 7 pages and may only be used or reproduced in its entirety.

FIRES
The Experts on Fire Safety

RESISTANCE TO FIRE
EXTENDED APPLICATION REPORT

FIRES-ER-038-11-NURE

Name of the product: Wall made of sandwich panels BALEXTHERM PU-F120 with PIR core, 120 mm thick

Sponsor: BALEX METAL spolka z o.o.
ul.Wejherowska 12 C
84-239 Bolszewo
Poland

Prepared by: FIRES, s.r.o.
Approved Body No. SK01
Osloboditeľov 282
059 35 Batizovce
Slovak republic

Notified Body No.: 1396

Task No.: PR-11-0229
Date of issue: 08. 09. 2011

Reports: 3
Copy No.: 2

Distribution list:

Copy No. 1 FIRES, s. r. o., Osloboditeľov 282, 059 35 Batizovce, Slovak republic (electronic version)
Copy No. 2 BALEX METAL spolka z o.o., ul.Wejherowska 12 C, 84-239 Bolszewo, Poland (electronic version)
Copy No. 3 BALEX METAL spolka z o.o., ul.Wejherowska 12 C, 84-239 Bolszewo, Poland

This extended application report consists of 7 pages and may only be used or reproduced in its entirety.

ilac-MRA SNAS Reg. No. 041/S-159

FIRES
The Experts on Fire Safety

CLASSIFICATION OF FIRE RESISTANCE
with extended field of application

FIRES-CR-154-11-AURE

Name of the product: Wall made of sandwich panels BALEXTHERM PU-F120 with PIR core, 120 mm thick

Sponsor: BALEX METAL spolka z o.o.
ul.Wejherowska 12 C
84-239 Bolszewo
Poland

Prepared by: FIRES, s.r.o.
Approved Body No. SK01
Osloboditeľov 282
059 35 Batizovce
Slovak republic

Notified Body No.: 1396

Task No.: PR-11-0229
Date of issue: 08. 09. 2011

Reports: 3
Copy No.: 2

Distribution list:

Copy No. 1 FIRES, s. r. o., Osloboditeľov 282, 059 35 Batizovce, Slovak republic (electronic version)
Copy No. 2 BALEX METAL spolka z o.o., ul.Wejherowska 12 C, 84-239 Bolszewo, Poland (electronic version)
Copy No. 3 BALEX METAL spolka z o.o., ul.Wejherowska 12 C, 84-239 Bolszewo, Poland

This classification report consists of 4 pages and may only be used or reproduced in its entirety.

This report includes accreditation mark SNAS with additional mark ILAC-MRA. SNAS is signatory of ILAC-MRA, Mutual recognition agreement (of accreditation), which is focused on promoting of international acceptance of accredited laboratory data and reducing technical barriers to trade, such as the retesting of products on markets of signatories. More information about ILAC-MRA is on www.ilac.org. Signatories of ILAC-MRA are e.g. SNAS (Slovakia), CAI (Czech Republic), PCA (Poland), DakkS (Germany) or BMWA (Austria). Up to date list of ILAC-MRA signatories is on www.ilac.org/documents/mra_signatories.pdf. FIRES, s.r.o. Batizovce is full member of EGOLF also, more information www.egolf.org.uk.

ilac-MRA SNAS Reg. No. 041/S-159

FIRES
The Experts on Fire Safety

CLASSIFICATION OF FIRE RESISTANCE
with extended field of application

FIRES-CR-197-12-AURE

Name of the product: Wall made of sandwich panels BALEXTHERM-PU-F 200 mm with PIR core

Sponsor: BALEX METAL spolka z o.o.
ul.Wejherowska 12 C
84-239 Bolszewo
Poland

Prepared by: FIRES, s.r.o.
Approved Body No. SK01
Osloboditeľov 282
059 35 Batizovce
Slovak Republic

Notified Body No.: 1396

Task No.: PR-12-0386
Date of issue: 24. 10. 2012

Reports: 3
Copy No.: 2

Distribution list:

Copy No. 1 FIRES, s. r. o., Osloboditeľov 282, 059 35 Batizovce, Slovak Republic (electronic version)
Copy No. 2 BALEX METAL spolka z o.o., ul.Wejherowska 12 C, 84-239 Bolszewo, Poland (electronic version)
Copy No. 3 BALEX METAL spolka z o.o., ul.Wejherowska 12 C, 84-239 Bolszewo, Poland

This classification report consists of 4 pages and may only be used or reproduced in its entirety.

This report includes accreditation mark SNAS with additional mark ILAC-MRA. SNAS is signatory of ILAC-MRA, Mutual recognition agreement (of accreditation), which is focused on promoting of international acceptance of accredited laboratory data and reducing technical barriers to trade, such as the retesting of products on markets of signatories. More information about ILAC-MRA is on www.ilac.org. Signatories of ILAC-MRA are e.g. SNAS (Slovakia), CAI (Czech Republic), PCA (Poland), DakkS (Germany) or BMWA (Austria). Up to date list of ILAC-MRA signatories is on www.ilac.org/documents/mra_signatories.pdf. FIRES, s.r.o. Batizovce is full member of EGOLF also, more information www.egolf.org.uk.

II. DETAILS OF CONSTRUCTION AND ARCHITECTURE ELEMENTS

1. BASIC DRAWNINGS

1.1. F01
BALEXTHERM-PU-F panel joint, profile types

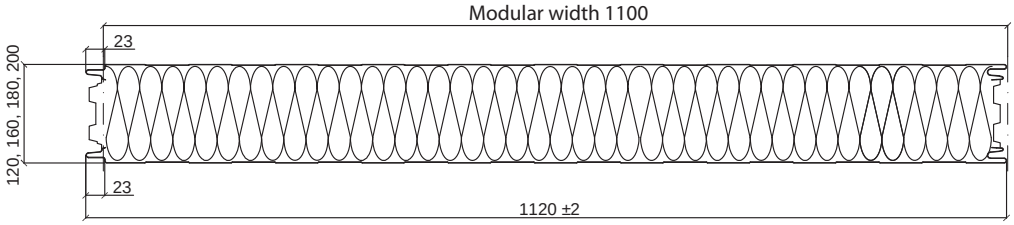

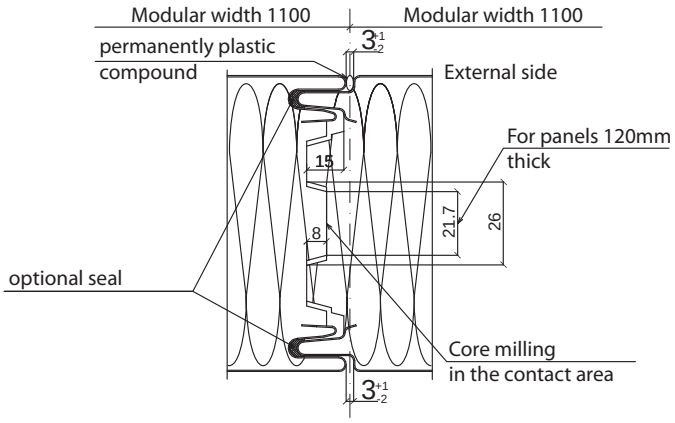

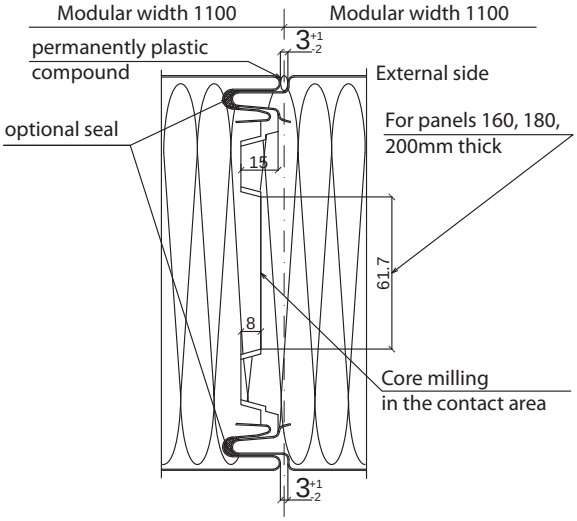

EXTERNAL CLADDINGS:

L
lined

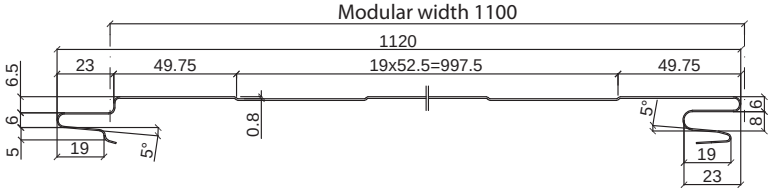

M
microprofiled

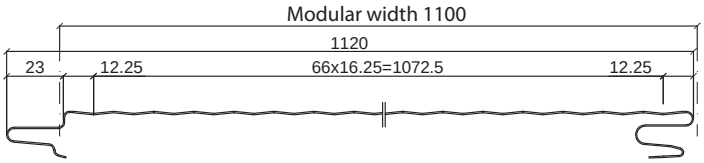

G*
flat

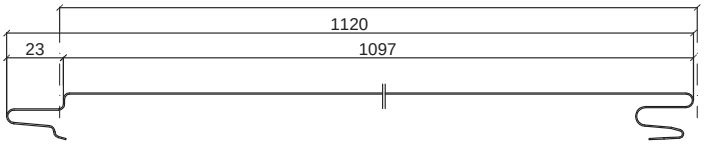

C**
clearline

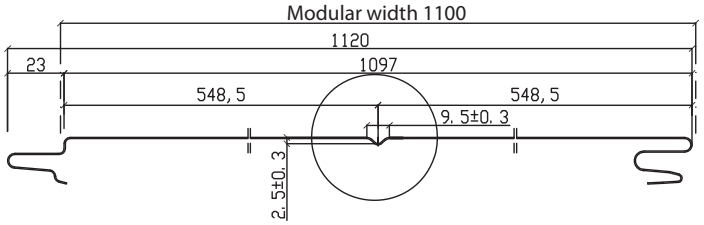

INTERNAL CLADDINGS:

L
lined

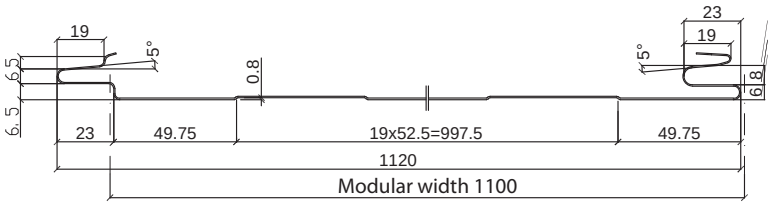

G*
flat

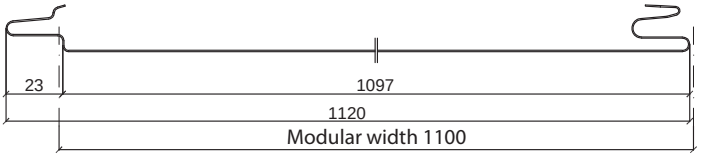

** G profiling available only for minimum 0,50mm panel thickness,*
*** C profiling available for 0,50mm and 0,60mm panel thickness (production only at the production plant in Bolszewo)*

1.2. F02
Fastening panels in the joint to the transom

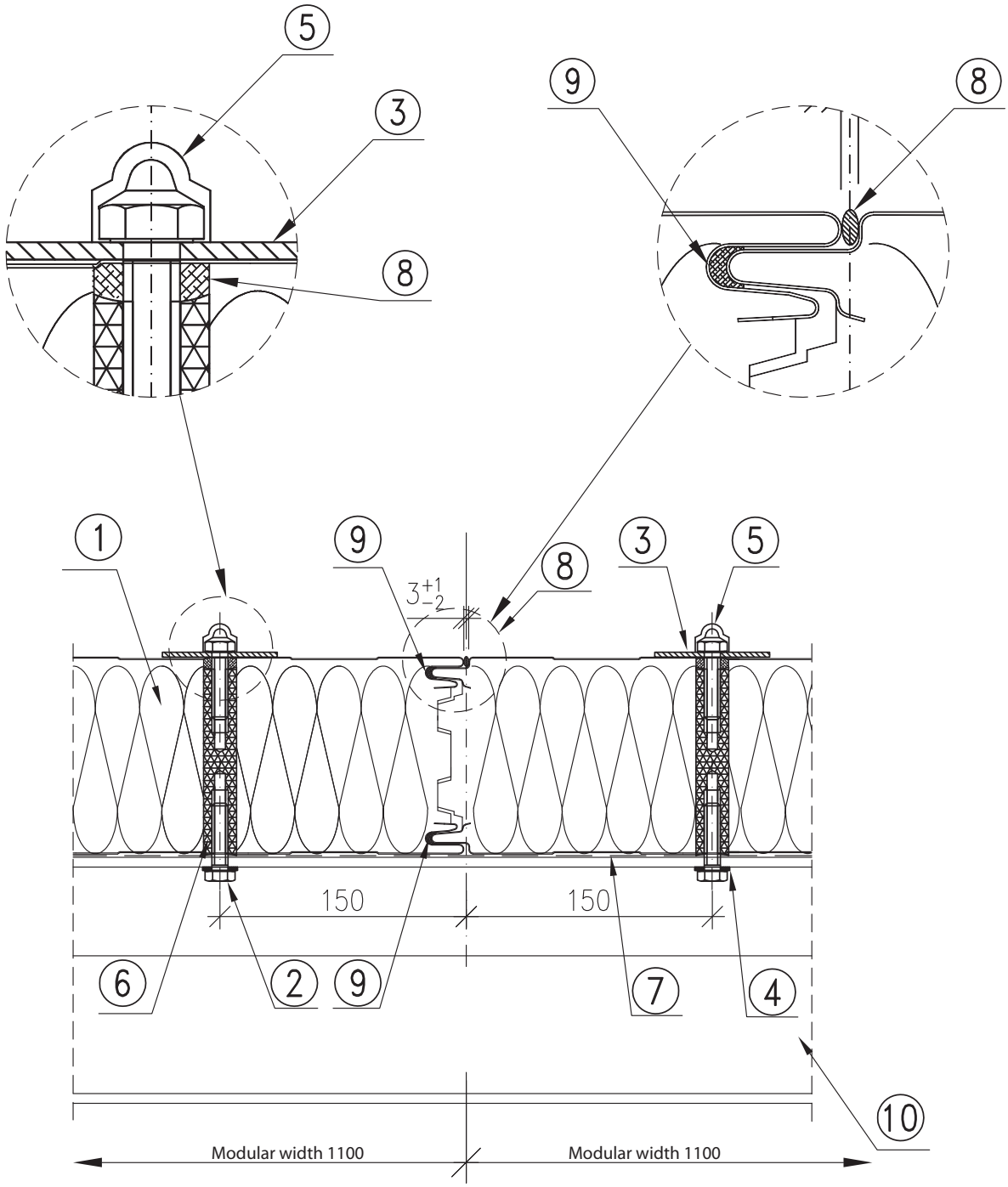

1. BALEXTHERM-PU-F panel
2. Galvanized M 10x40 screw
3. Galvanized varnished load carrying washer Ø70/Ø10.5
4. Ø21/Ø10.5 galvanized washer
5. K 1 protective cap
6. Polyamide sleeve
7. Self-adhesive polyethylene tape (recommended)
8. Permanently plastic sealant (recommended SOUDAFLEX)
9. Rubber gasket, option on demand
10. Wall transom acc to the construction design

2. FASTENING SYSTEM BY MEANS OF INSULATING NUTS WITH STEEL INSERT

2.1. F03

System of fastening cold storage panels by means of insulating nuts with steel insert

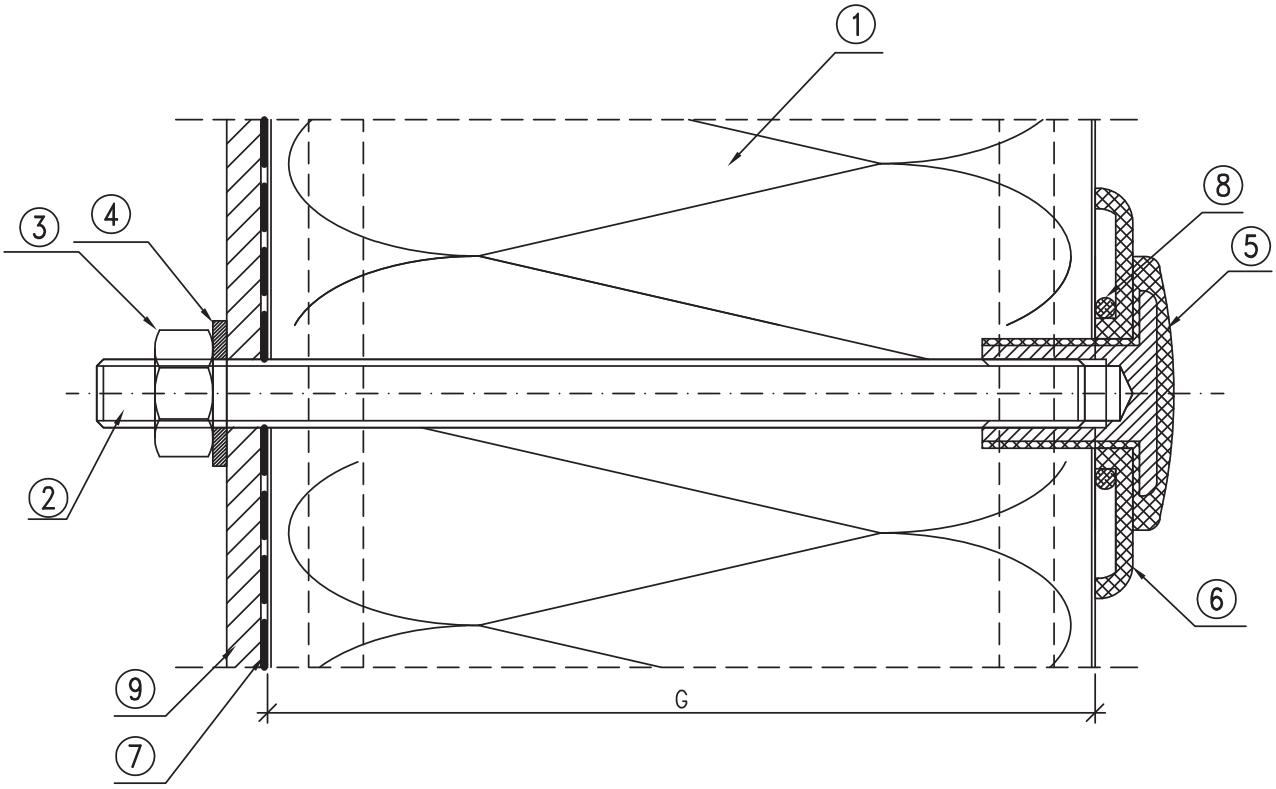

1. BALEXTHERM-PU-F panel
2. Galvanized screwed bar M 10 x L bar where L = G + 25 mm
3. M 10 galvanized nut
4. Ø21/Ø10.5 galvanized washer
5. PVC insulating nut with a steel INJ 235 insert
6. PVC INJ 24 washer
7. Self-adhesive polyethylene tape (recommended)
8. Permanently plastic sealant (recommended SOUDAFLEX)
9. Element of the building's structure

2.2. F04
Fastening panels to hot-rolled transom by means of insulating nuts with steel insert

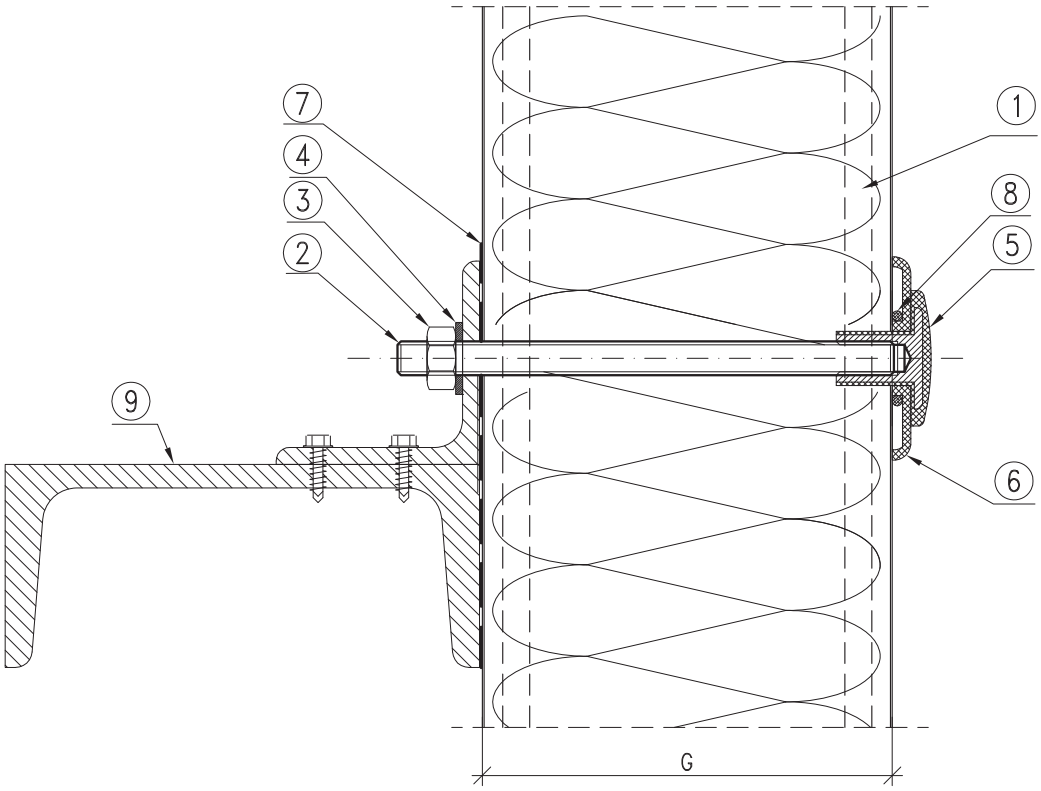

1. BALEXTHERM-PU-F panel
2. Galvanized screwed bar M 10 x L bar where L = G + 25 mm
3. M 10 galvanized nut
4. Ø21/Ø10.5 galvanized washer
5. PVC insulating nut with a steel INJ 235 insert
6. PVC INJ 24 washer
7. Self-adhesive polyethylene tape (recommended)
8. Permanently plastic sealant (recommended SOUDAFLEX)
9. Wall transom acc to the construction design

2.3. F05
Suspending panels under the ceiling by means of insulating nuts with steel insert

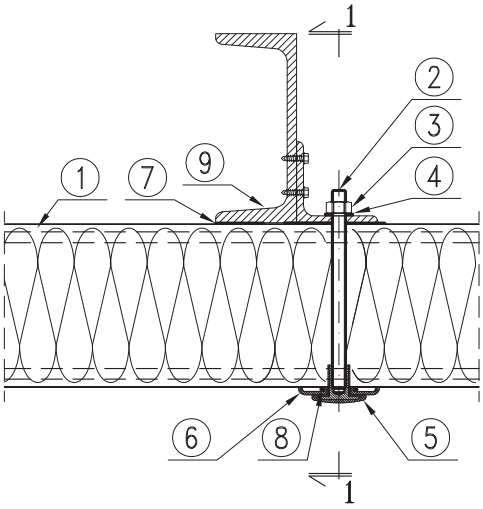

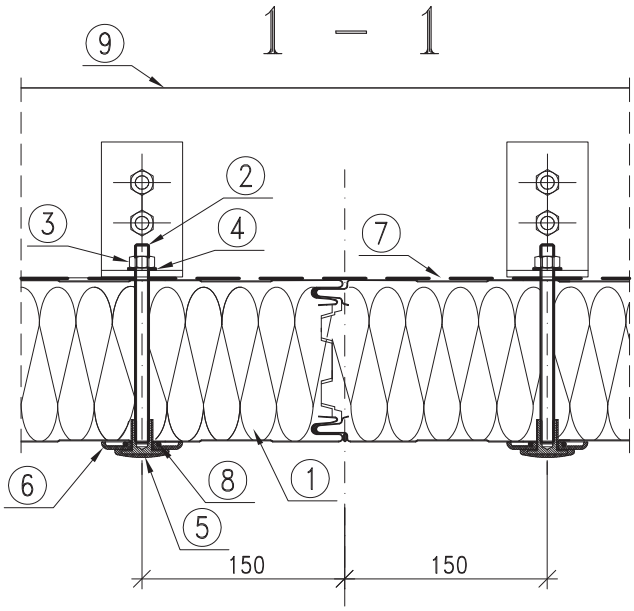

1. BALEXTHERM-PU-F panel
2. Galvanized screwed bar M 10 x L bar where L = G + 25 mm
3. M 10 galvanized nut
4. Ø21/Ø10.5 galvanized washer
5. PVC insulating nut with a steel INJ 235 insert
6. PVC INJ 24 washer
7. Self-adhesive polyethylene tape (recommended)
8. Permanently plastic sealant (recommended SOUDAFLEX)
9. Steel binder acc. to the construction design

3. SYSTEM OF FASTENING COLD STORAGE PANELS BY MEANS OF INSULATING POLYAMIDE SLEEVES

3.1. F06
System of fastening cold storage panels by means of insulating polyamide sleeves

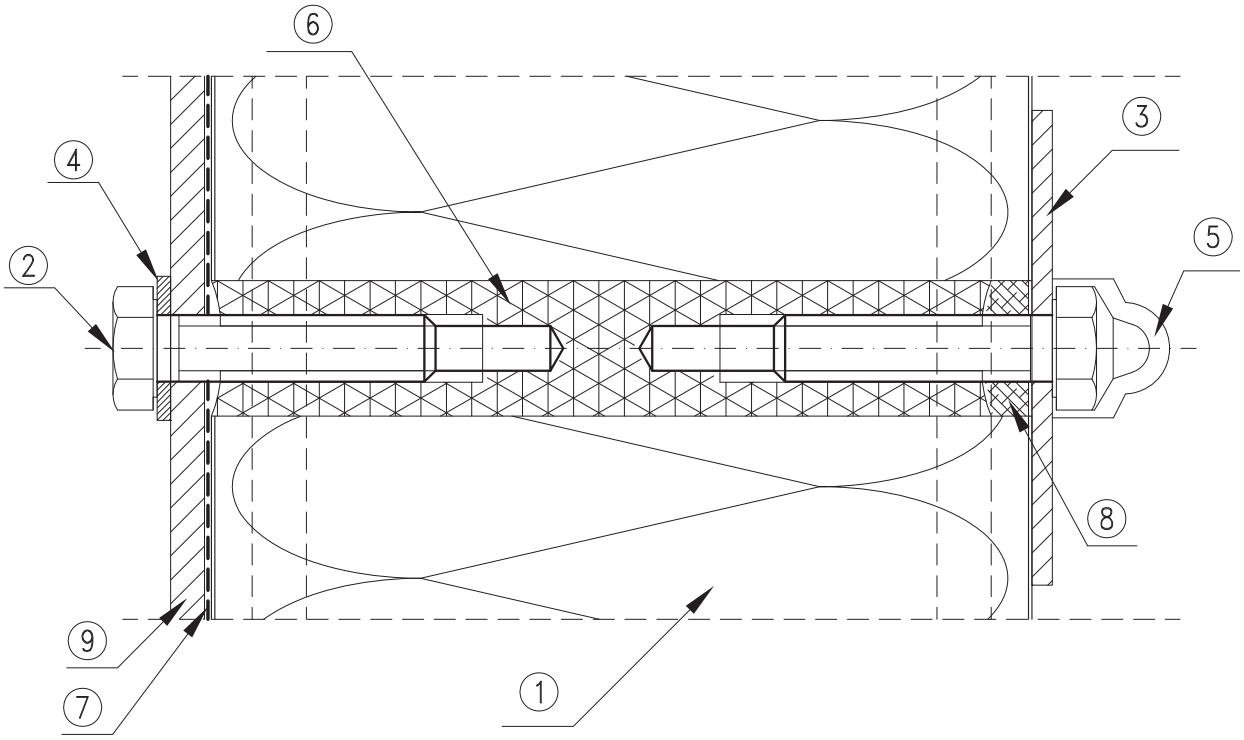

1. BALEXTHERM-PU-F panel
2. M 10x40 galvanized screw
3. Galvanized varnished load carrying washer Ø70/Ø10.5 (white)
4. Ø21/Ø10.5 galvanized washer
5. Protective cap
6. Polyamide sleeve
7. Self-adhesive polyethylene tape (recommended)
8. Permanently plastic sealant (recommended SOUDAFLEX)
9. Element of the building's structure

3.2. F07
Fastening panels to hot-rolled transom by means of insulating polyamide sleeves

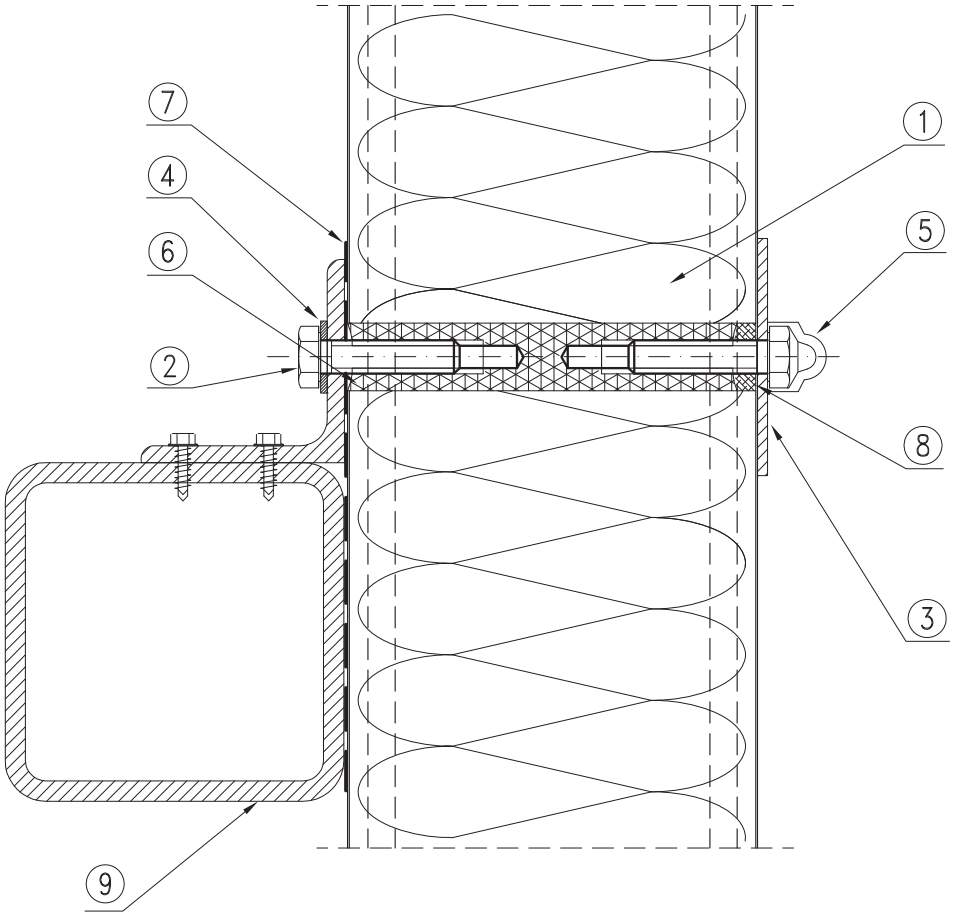

1. BALEXTHERM-PU-F panel
2. Galvanized M 10x40 screw
3. Galvanized varnished load carrying washer Ø70/Ø10.5(white)
4. Ø21/Ø10.5 galvanized washer
5. Protective cap
6. Polyamide sleeve
7. Self-adhesive polyethylene tape (recommended)
8. Permanently plastic sealant (recommended SOUDAFLEX)
9. Wall transom acc. to the structural design

3.3. F08
Fastening panels to thin-walled transom by means of insulating polyamide sleeves

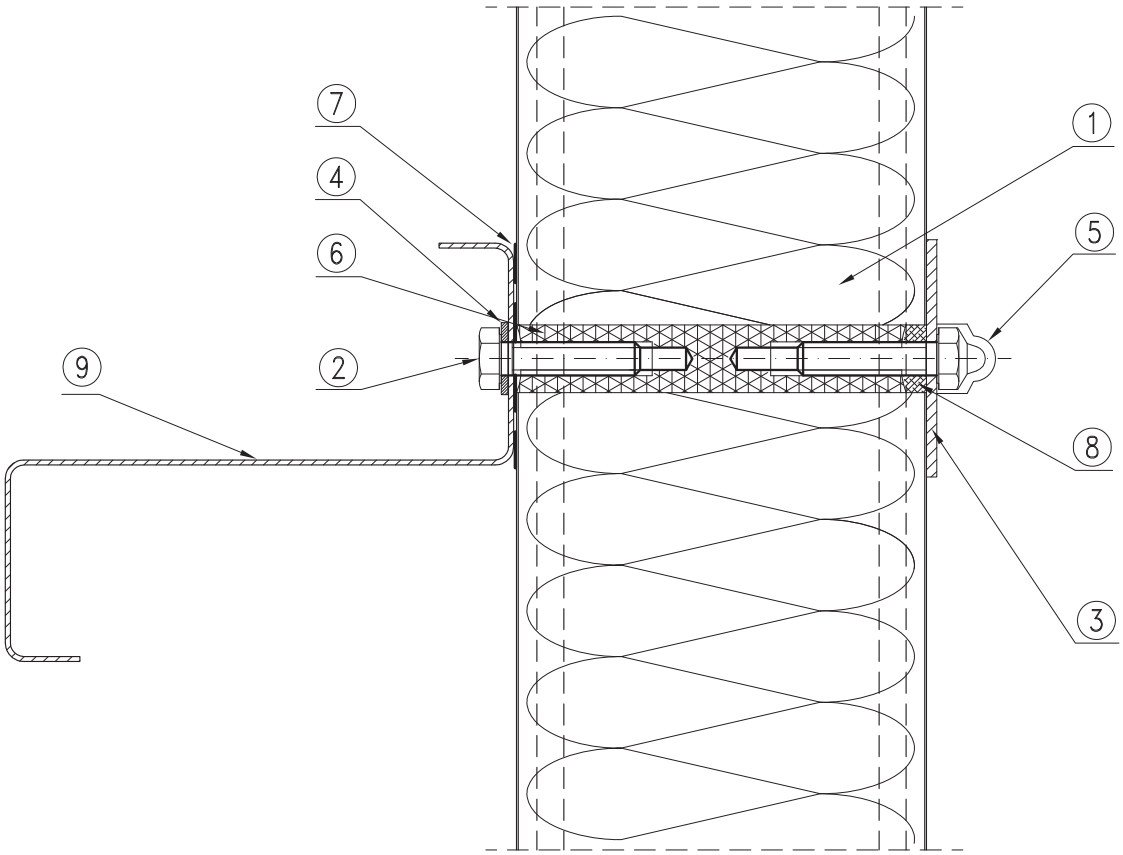

1. BALEXTHERM-PU-F panel
2. Galvanized M 10x40 screw
3. Galvanized varnished LB71 load carrying washer Ø70/Ø10.5 (white)
4. Ø21/Ø10.5 galvanized washer
5. Protective cap
6. Polyamide sleeve
7. Self-adhesive polyethylene tape (recommended)
8. Permanently plastic sealant (recommended SOUDAFLEX)
9. Wall transom acc. to the construction design

3.4. F09
Sliding panel joint on a wall transom

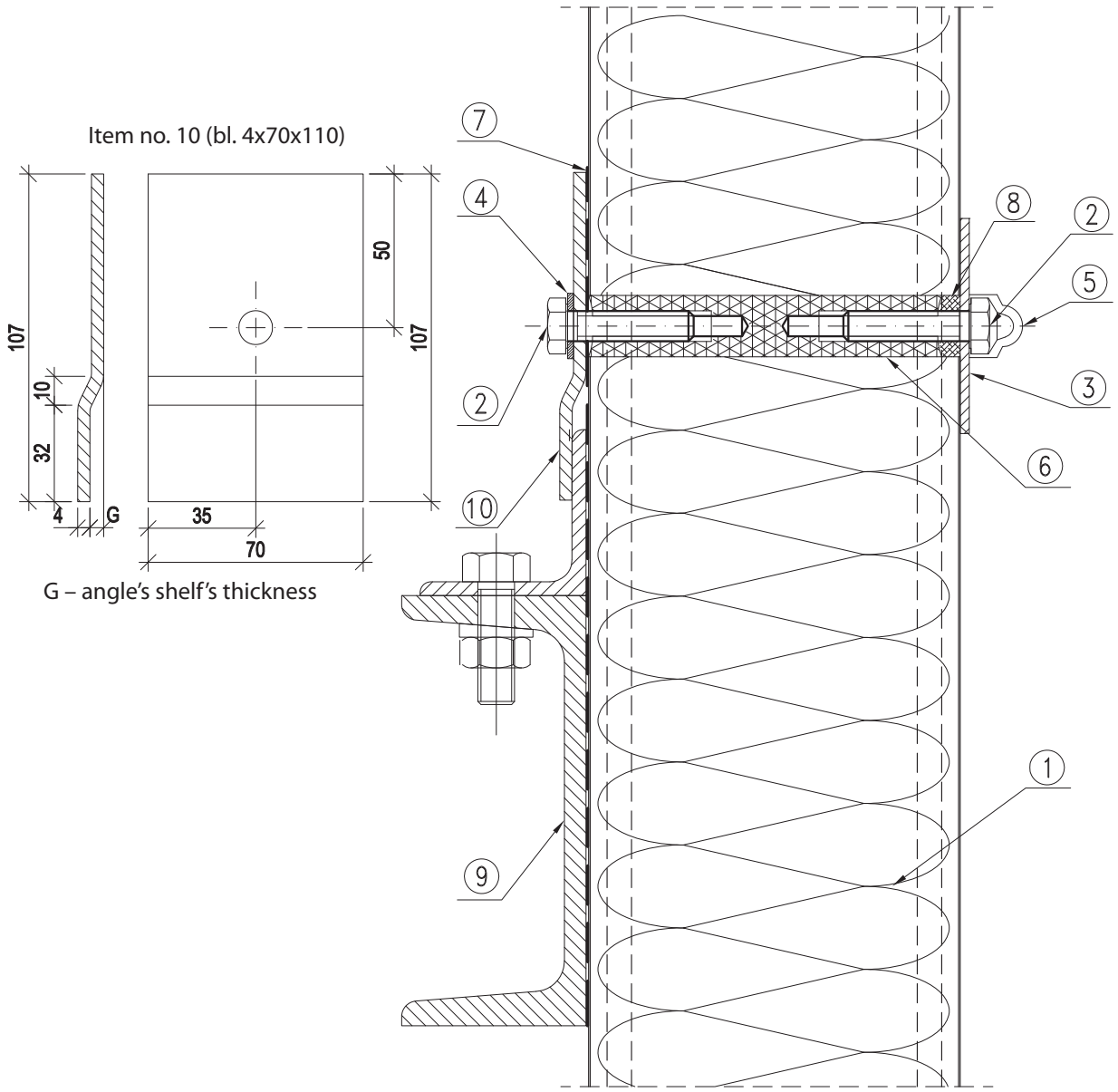

1. BALEXTHERM-PU-F panel
2. Galvanized M 10x40 screw
3. Galvanized varnished load carrying washer Ø70/Ø10.5 (white)
4. Ø21/Ø10.5 galvanized washer
5. Protective cap
6. Polyamide sleeve
7. Self-adhesive polyethylene tape (recommended)
8. Permanently plastic sealant (recommended SOUDAFLEX)
9. Wall transom acc. to the construction design
10. Thrust washer (individual)

3.5. F10/1
Joining wall panels lengthwise. Cross section of the area of fastening to the wall transom

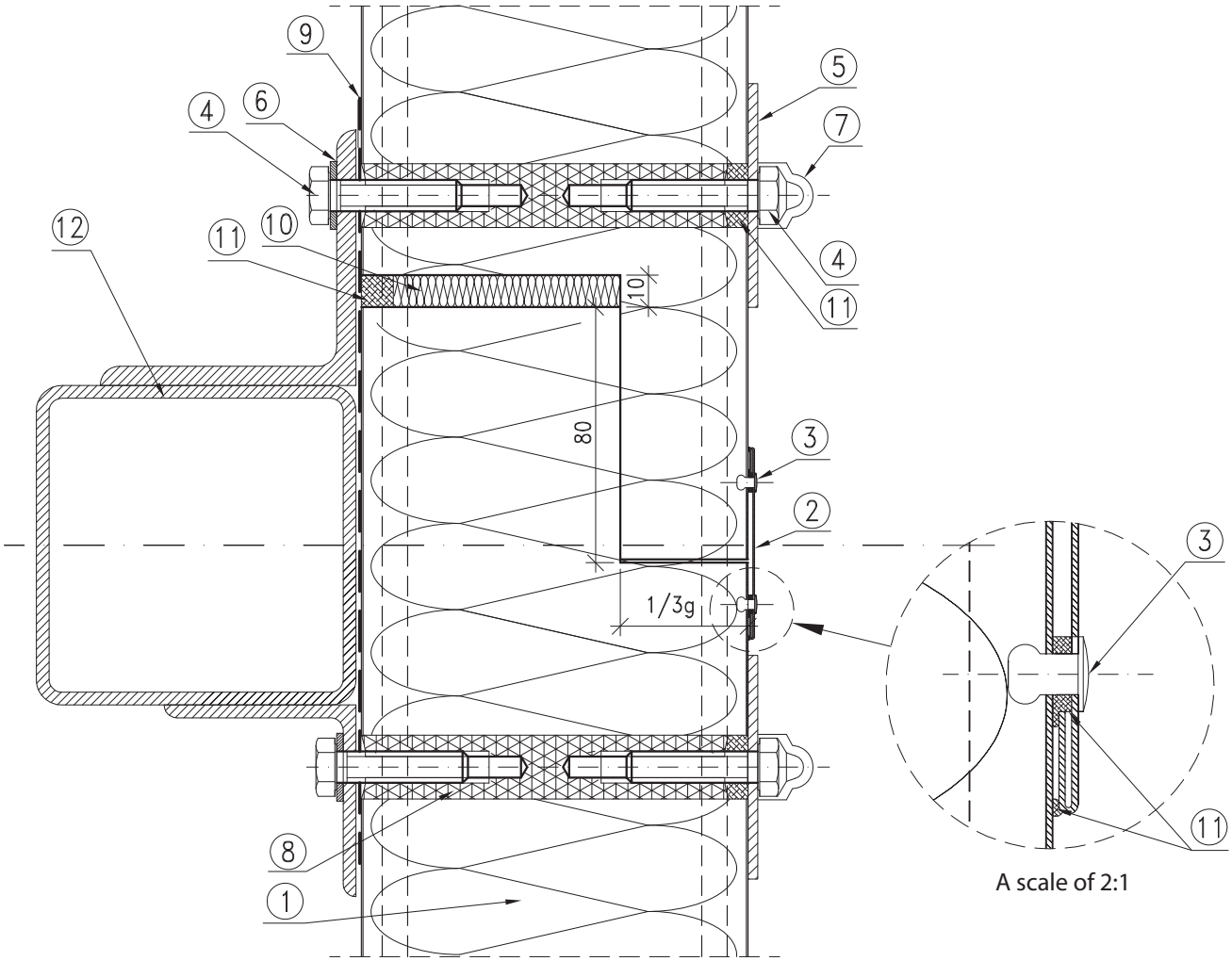

1. BALEXTHERM-PU-F panel
2. OBR 106
3. Ø4x10 Al/Fe tight blind rivet
4. Galvanized M10x40 screw
5. Galvanized varnished load carrying washer Ø70/Ø10.5 (white)
6. Ø21/Ø10.5 galvanized washer
7. Protective cap
8. Polyamide sleeve
9. Self-adhesive polyethylene tape (recommended)
10. Polyurethane foam
11. Permanently plastic sealant (recommended SOUDAFLEX)
12. Wall transom acc. to the construction design

3.6. F10/2
Joining wall panels lengthwise. Cross section outside the area of fastening to the wall transom

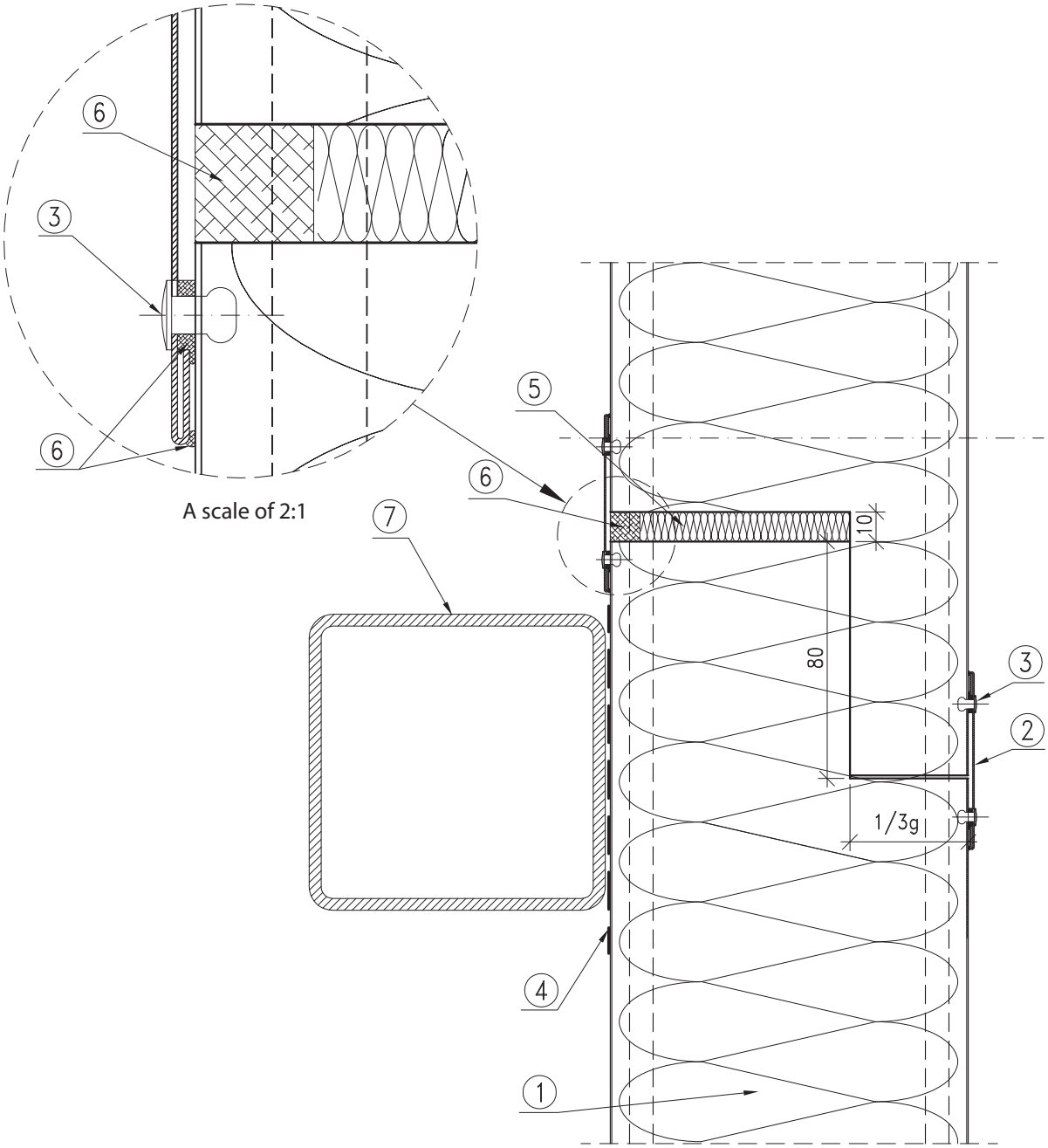

1. BALEXTHERM-PU-F panel
2. OBR 106
3. Ø4x10 Al/Fe tight blind rivet
4. Self-adhesive polyethylene tape (recommended)
5. Polyurethane foam
6. Permanently plastic sealant (recommended SOUDAFLEX)
7. Wall transom acc. to the construction design

3.7. F11
Suspending panels under the ceiling by means of insulating polyamide sleeves

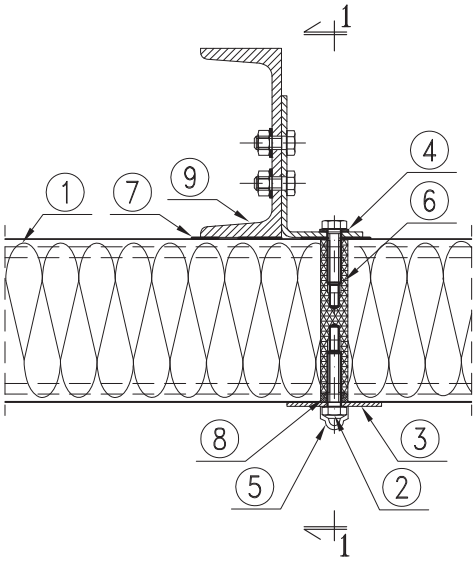

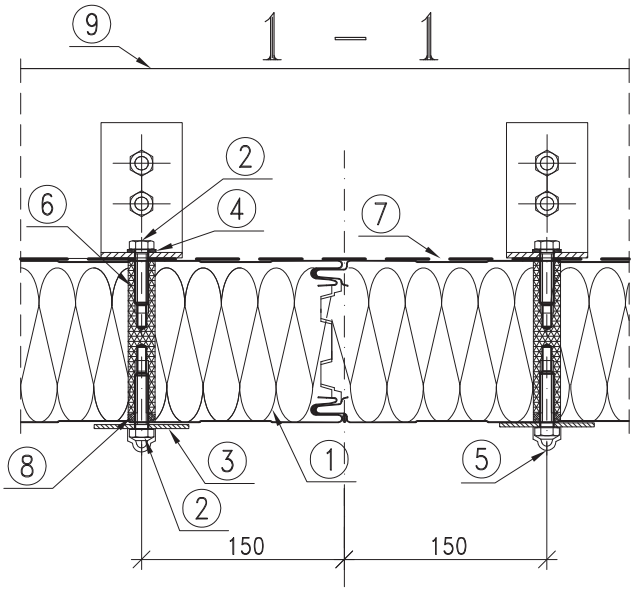

1. BALEXTHERM-PU-F panel
2. Galvanized M 10x40 screw
3. Galvanized varnished load carrying washer Ø70/Ø10.5 (white)
4. Ø21/Ø10.5 galvanized washer
5. Protective cap
6. Polyamide sleeve
7. Self-adhesive polyethylene tape (recommended)
8. Permanently plastic sealant (recommended SOUDAFLEX)
9. Steel structure acc. to the design

3.8. F12
Fastening panels in the ceiling and joining them lengthwise

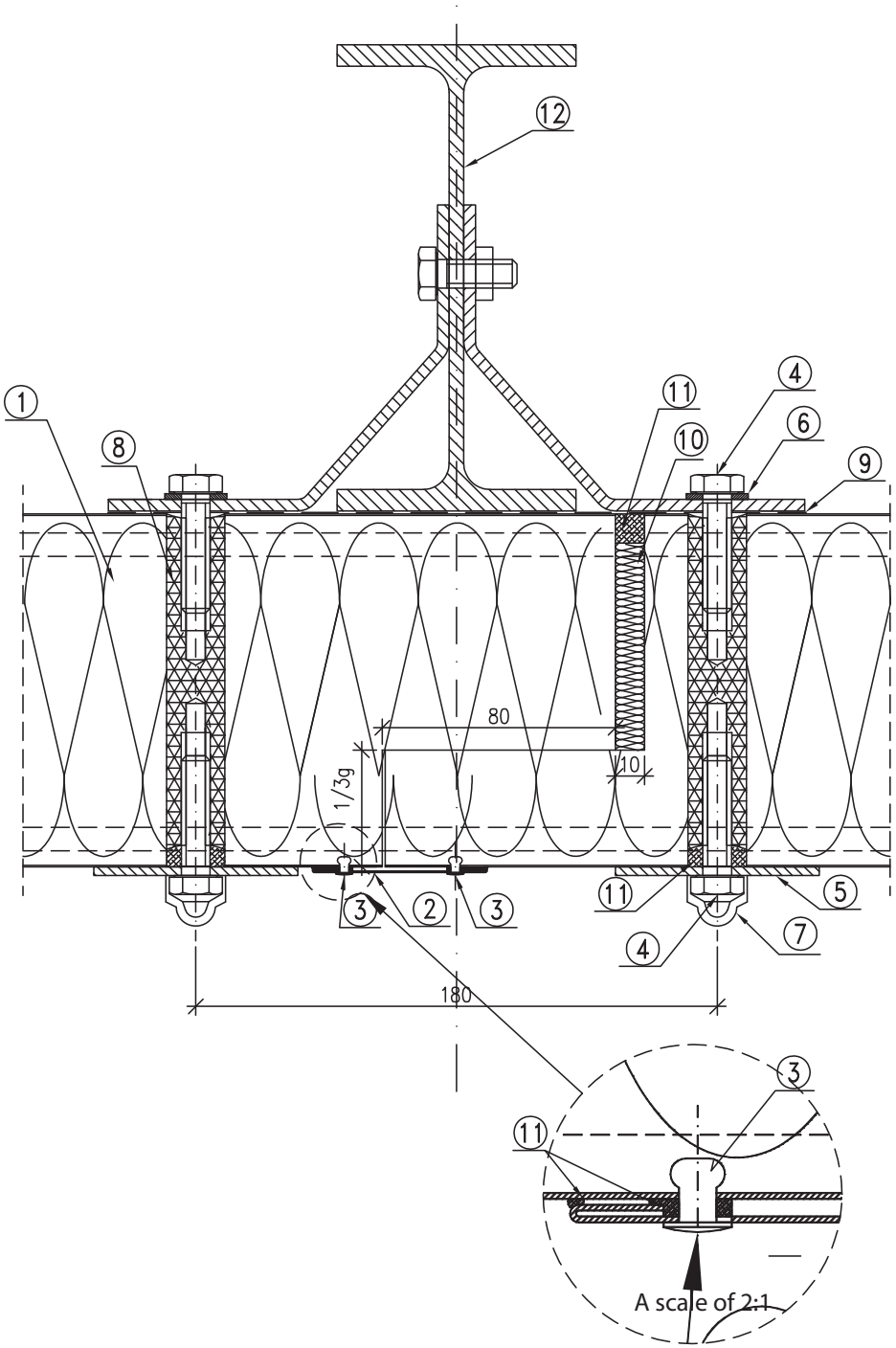

1. BALEXTHERM-PU-F panel
2. OBR 106
3. Ø4x10 Al/Fe tight blind rivet
4. Galvanized M 10x40 screw
5. Galvanized varnished load carrying washer Ø70/Ø10.5 (white)
6. Ø21/Ø10.5 galvanized washer
7. Protective cap
8. Polyamide sleeve
9. Self-adhesive polyethylene tape (recommended)
10. Polyurethane assembly foam
11. Permanently plastic sealant (recommended SOUDAFLEX)
12. Load carrying structure acc. to the design

4. SYSTEM OF FASTENING COLD STORAGE PANELS BY MEANS OF STAINLESS STEEL FASTENERS

4.1. F13

System of fastening cold storage panels by means of stainless steel fasteners

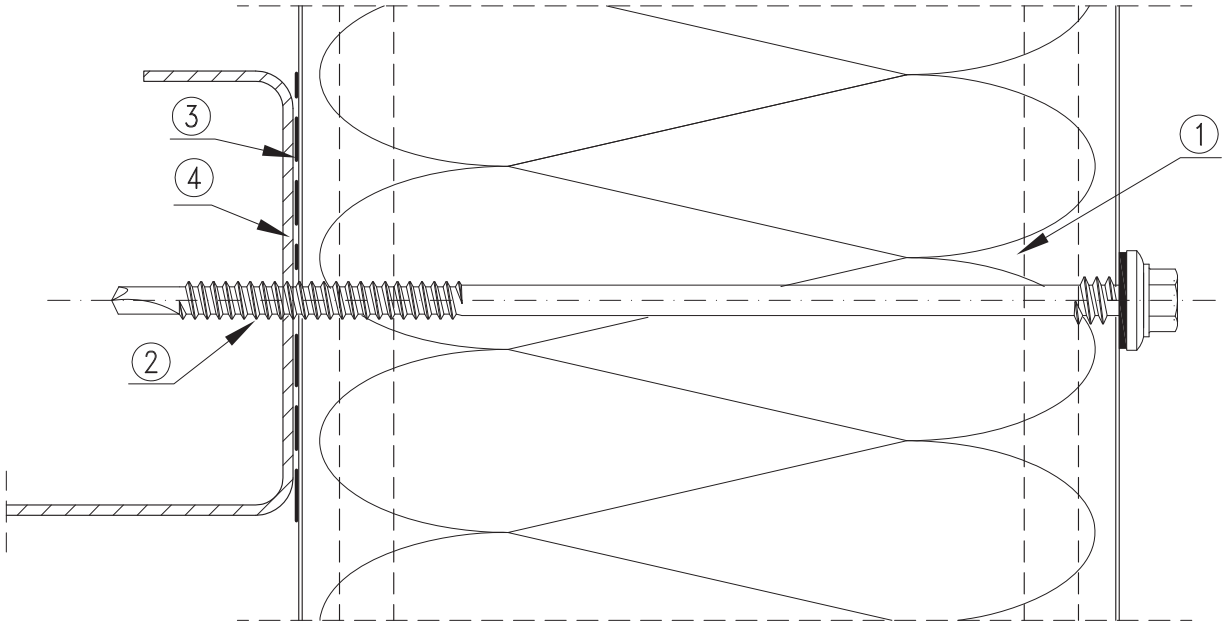

1. BALEXTHERM-PU-F panel
2. Stainless steel fastener for fastening panels
3. Self-adhesive polyethylene tape (recommended)
4. Element of the building's structure

4.2. F14
Fastening panels to thin-walled transom by means of stainless steel fasteners

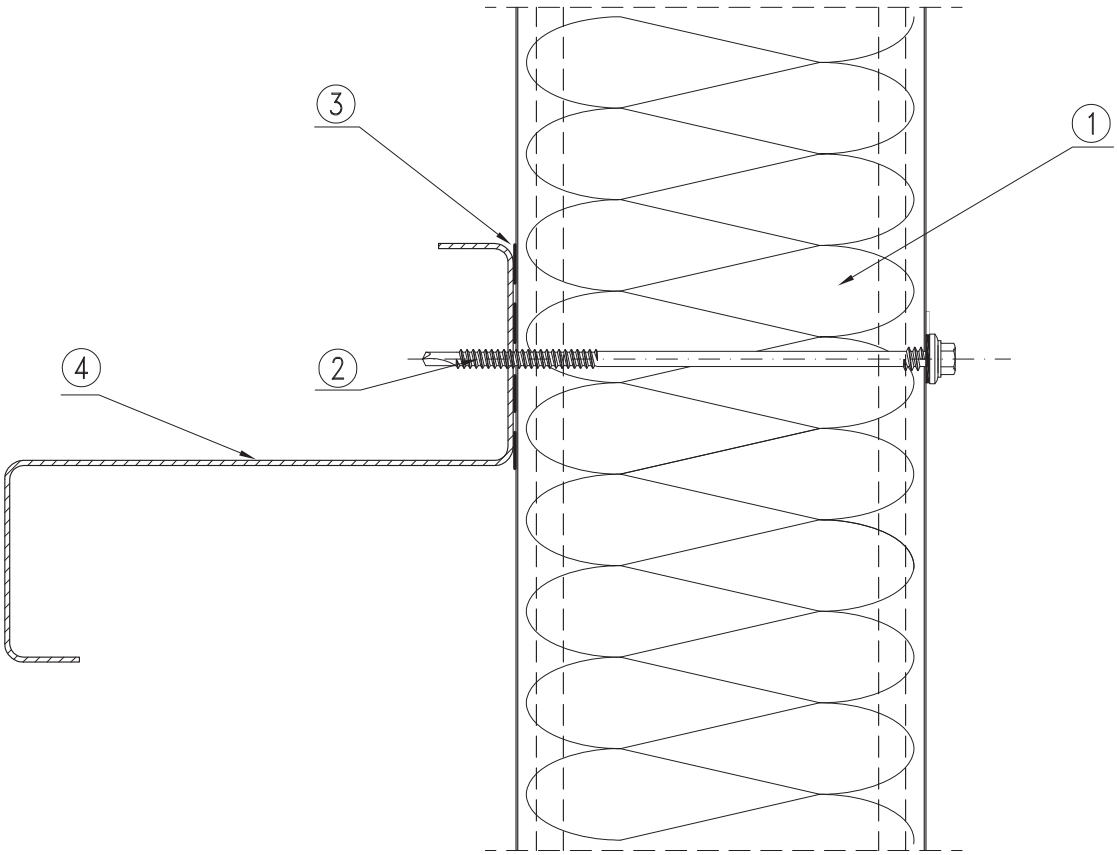

1. BALEXTHERM-PU-F panel
2. Stainless steel fastener for fastening panels
3. Self-adhesive polyethylene tape (recommended)
4. Wall transom acc. to the construction design

5. SYSTEM OF FASTENING BALEXTHERM-PU-F COLD STORAGE SANDWICH PANELS WITH THE USE OF LAX FASTENERS

5.1. F25

System of fastening Balextherm-PU-F cold storage sandwich panels with the use of LAX fasteners

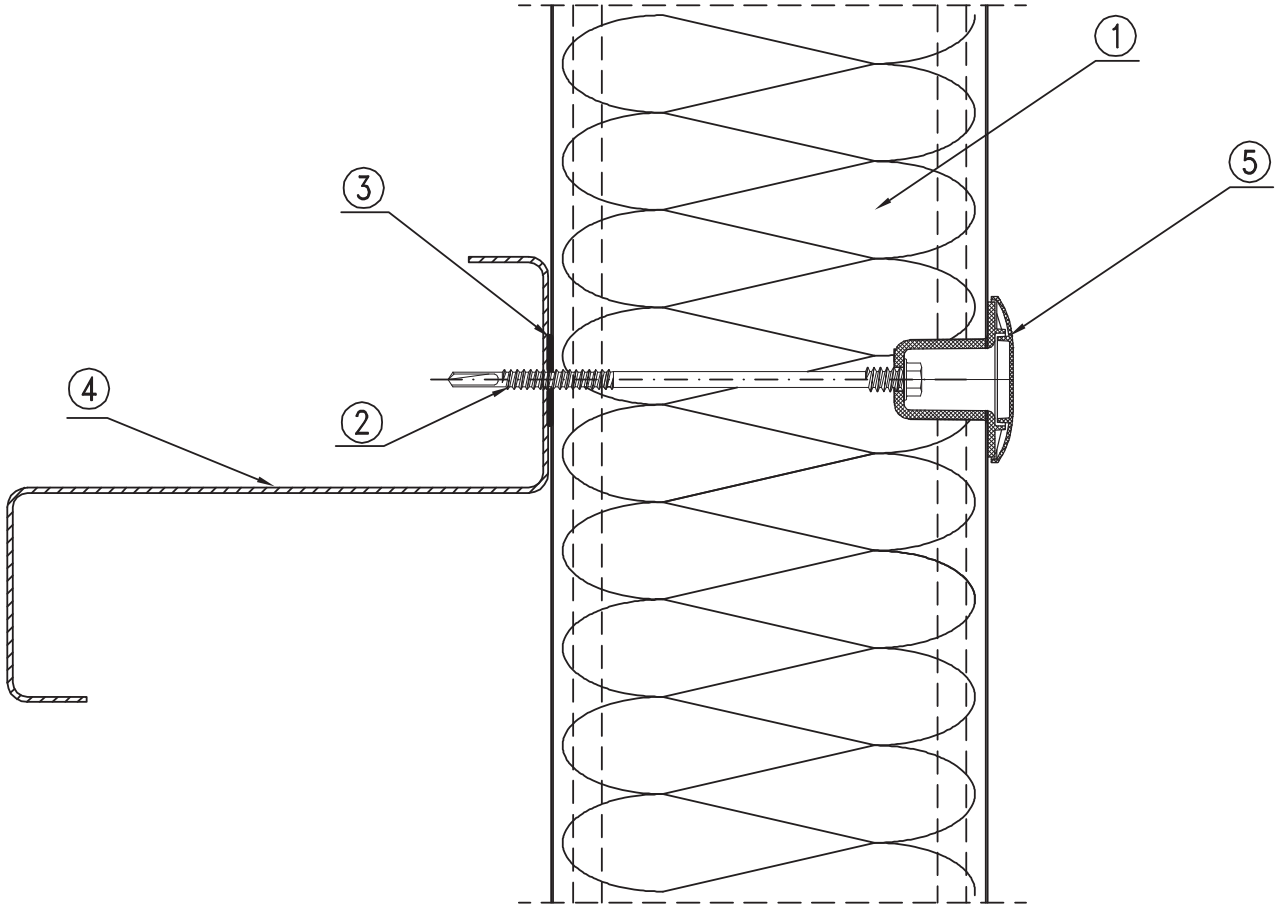

1. BALEXTHERM-PU-F panel
2. BALEXTHERM panel fastener
3. PES 3x20 polyethylene adhesive tape (recommended)
4. Wall spandrel beam according to structure design
5. LAX bushing and cap

6. SUSPENDING PANELS UNDER THE CEILING BY MEANS OF PCV PROFILES

6.1. F15
Suspending panels under the ceiling by means of a T profile

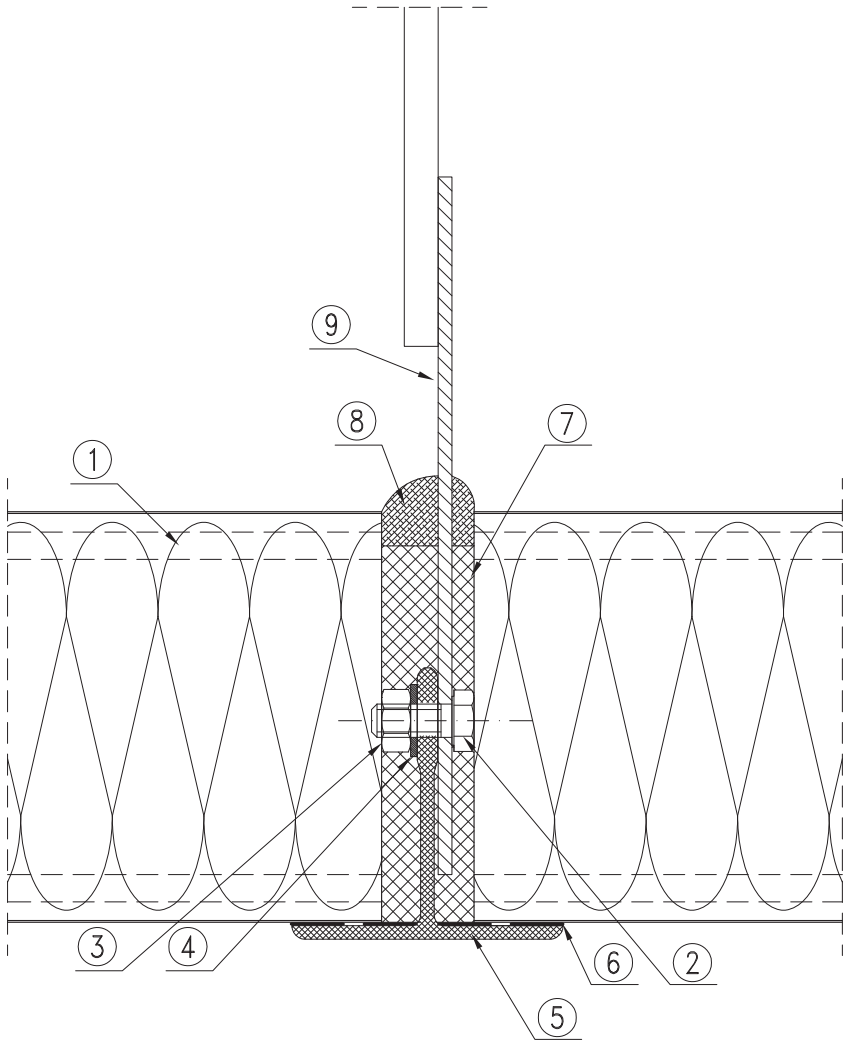

1. BALEXTHERM-PU-F panel
2. Galvanized M 10x40 screw
3. M 10 galvanized nut
4. Ø21/Ø10.5 galvanized washer
5. T profile (aluminium TALU 01 or Polyester)
6. Self-adhesive polyethylene tape (recommended)
7. Polyurethane assembly foam
8. Permanently plastic sealant (recommended SOUDAFLEX)
9. Hanger – tension member

6.2. F16/1
Suspended ceiling with TO.ALU.02 profile – recommended for cold roooms

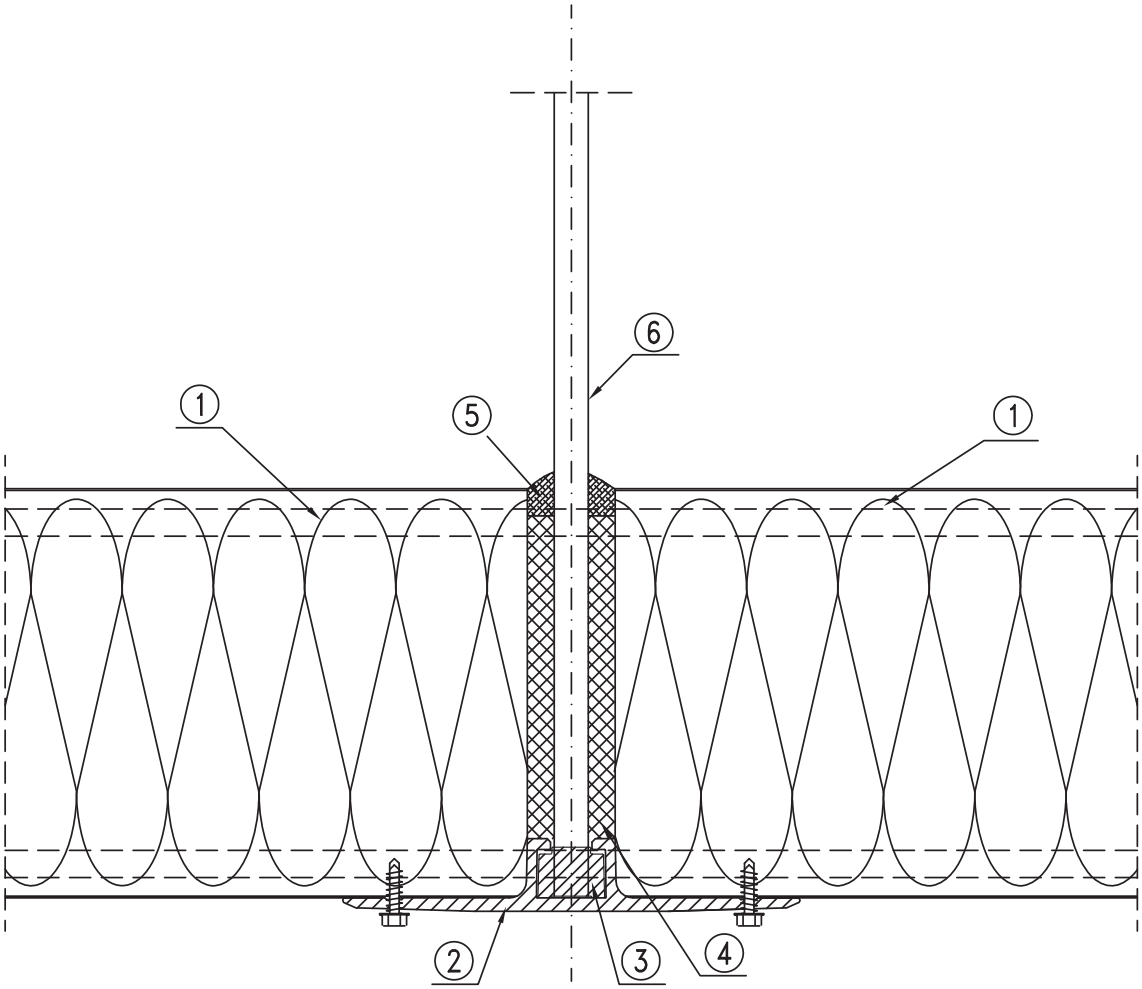

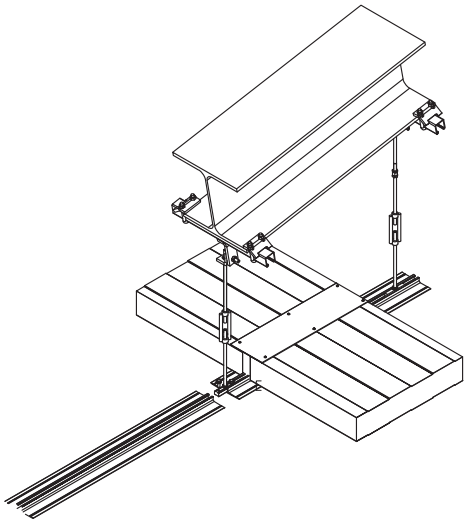

1. BALEXTHERM PU-F sandwich panel
2. TO.ALU.02 profile - recommended for cold rooms suspended ceilings
3. M10 nut, fixing A.315 profile
4. PU installation foam
5. Permanently elastic sealing compound
6. Hanger and linkage according to design

6.3. F16/2
Suspended ceiling with TH.ALU.02 – recommended for freeze rooms

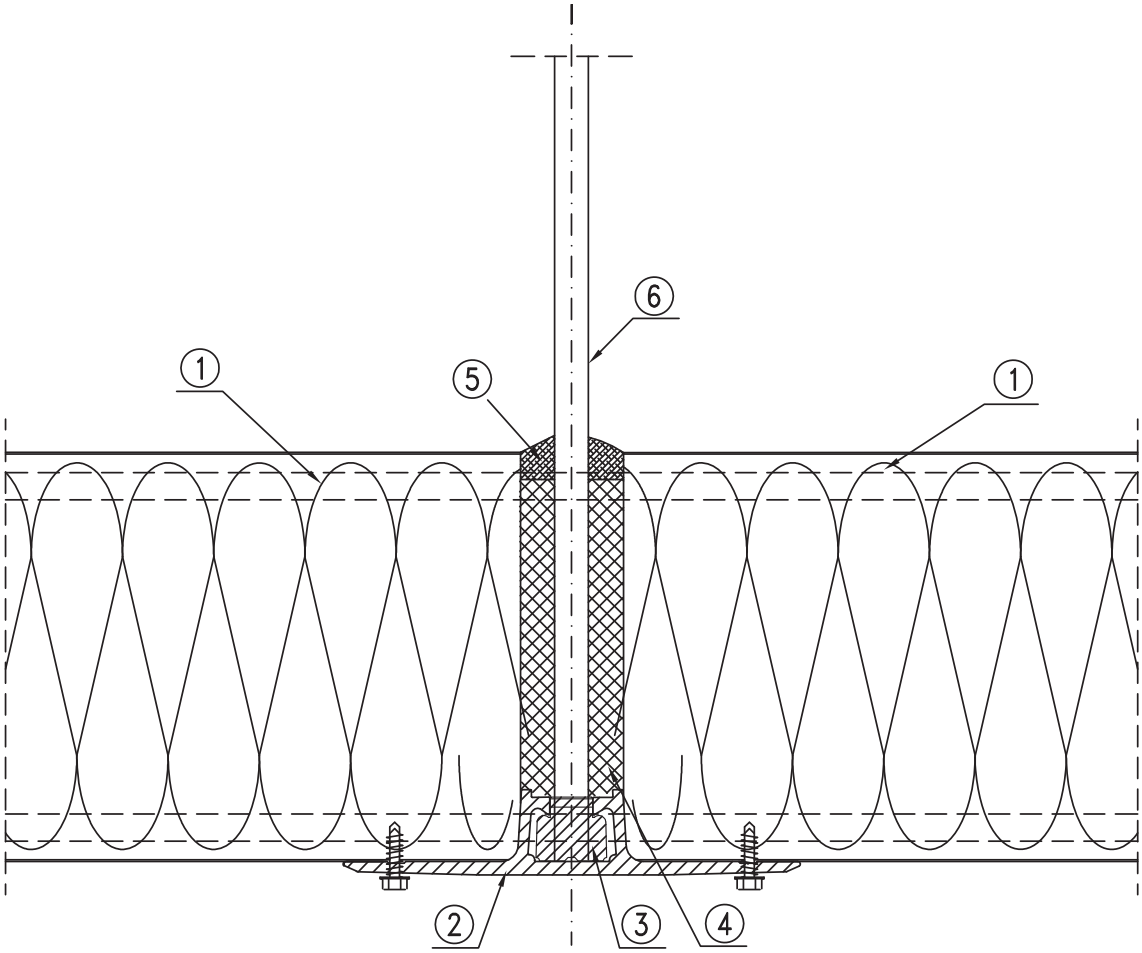

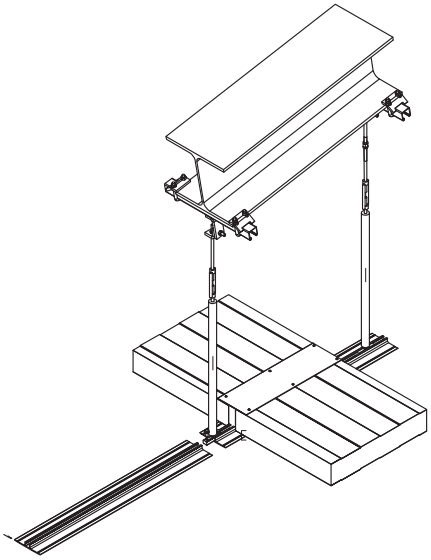

1. BALEXTHERM PU-F sandwich panel
2. TH.ALU.02 profile - recommended for freeze rooms suspended ceilings
3. M10 nut, fixing A.325 profile
4. PU installation foam
5. Permanently elastic sealing compound
6. Hanger and linkage according to design

7. SOLUTIONS FOR COLD STORAGE PANEL CORNERS

7.1. F17
Fastening wall panels in the corner

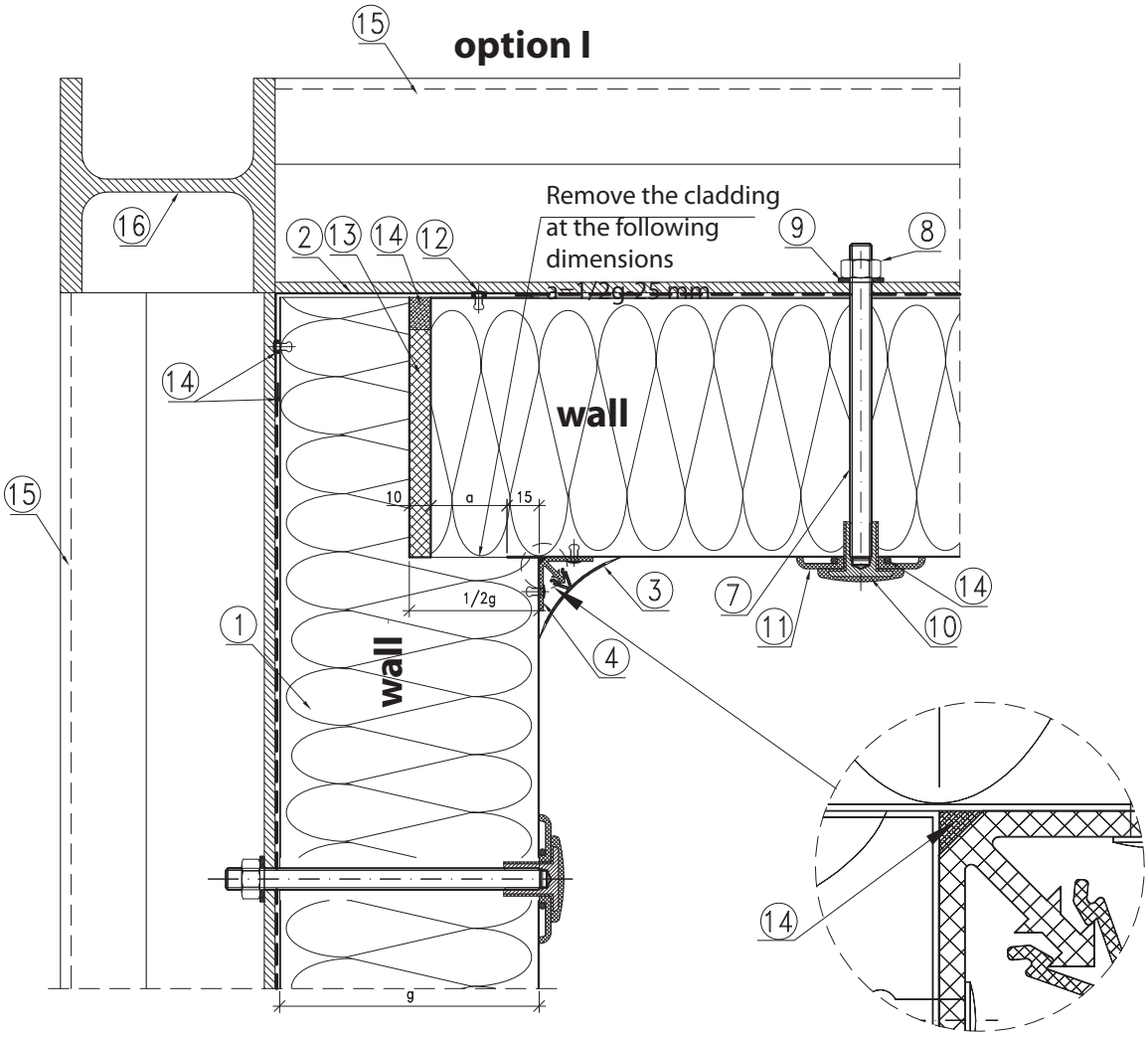

1. BALEXTHERM-PU-F panel
2. OBR 301
3. PVC corner profile
4. PVC mounting profile
5. OBR 302
6. OBR303
7. Screwed galvanized bar M10 x L where L = G + 25 mm
8. M10 galvanized nut
9. Ø21/Ø10.5 galvanized washer
10. PVC insulating nut with a steel INJ.235 insert
11. PVC INJ.24 washer
12. Ø4x10 Al/Fe tight blind rivet
13. Polyurethane assembly foam
14. Permanently plastic sealant (recommended SOUDAFLEX)
15. Wall transom acc. to the construction design
16. Post acc. to the construction design

7.2. F18
Joint of wall and ceiling panels in the corner

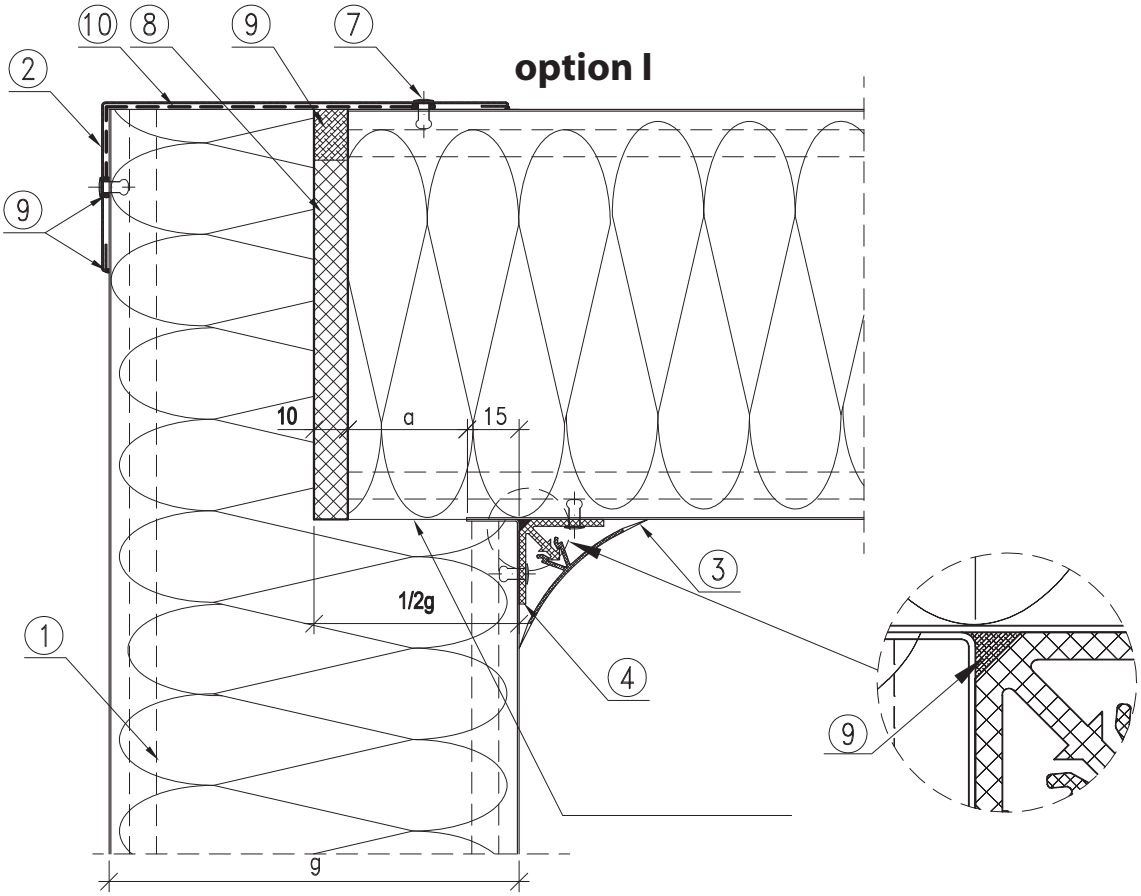

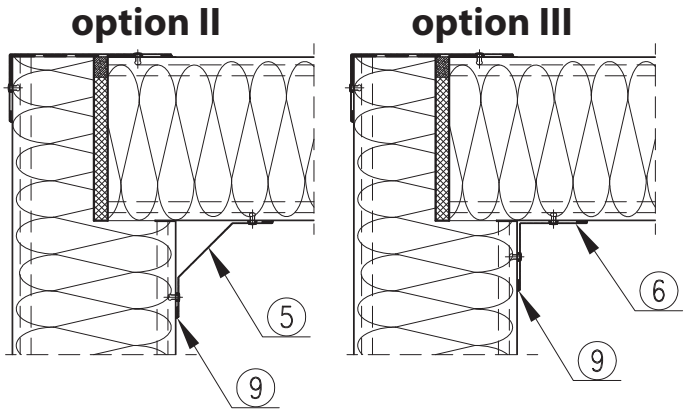

1. BALEXTHERM-PU-F panel
2. OBR 301
3. PVC Corner profile
4. PVC Mounting profile
5. OBR 302
6. OBR 303
7. Ø4x10 Al/Fe tight blind rivet
8. Polyurethane assembly foam
9. Permanently plastic sealant
   (recommended SOUDAFLEX)
10. Polyethylene foil

7.3. F19
Joint of partition walls with external walls

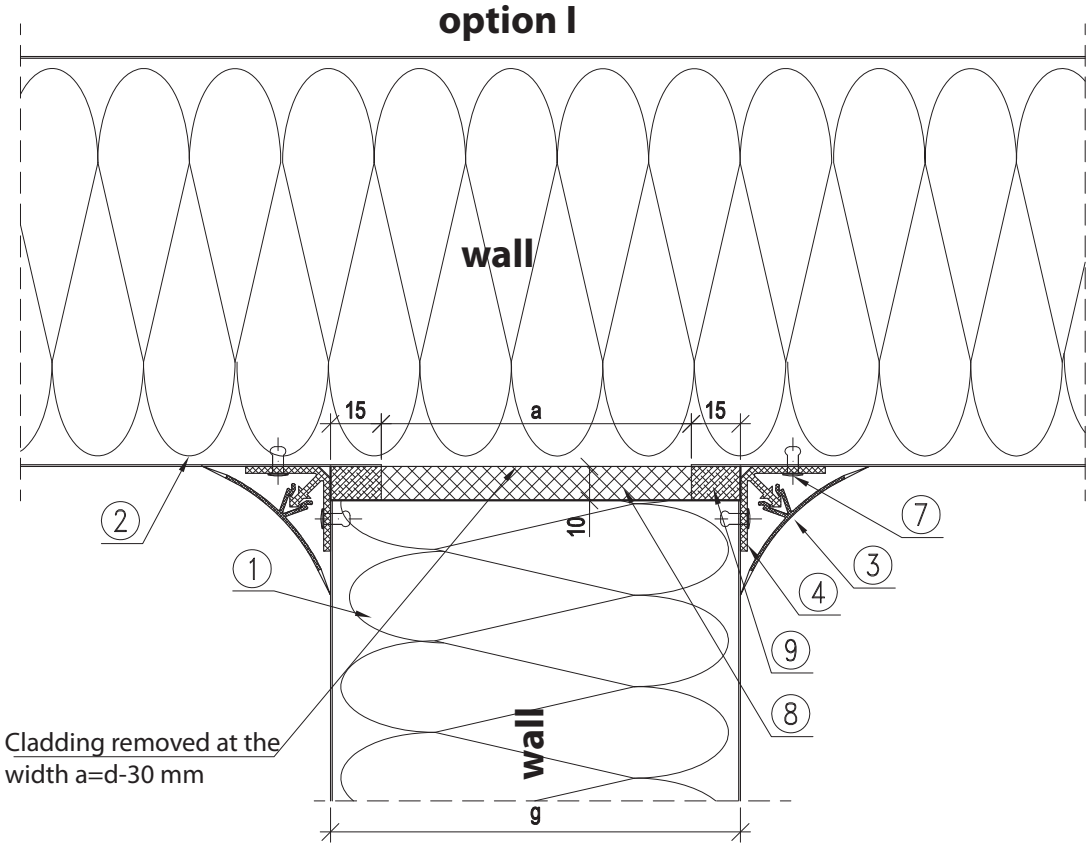

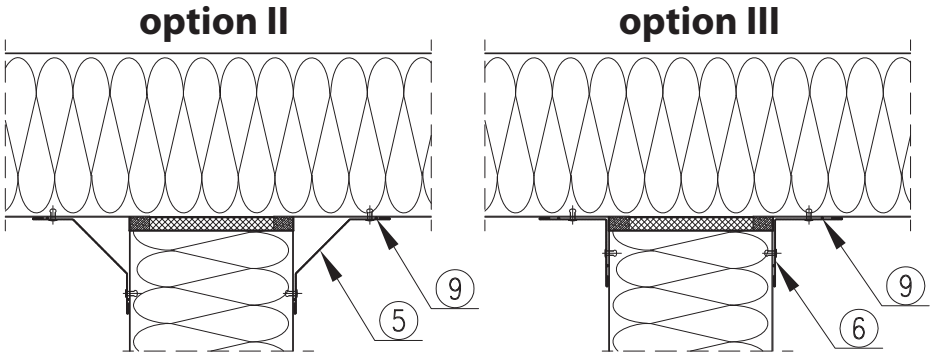

1. BALEXTHERM-PU-F panel
2. BALEXTHERM-PU-F panel
3. PVC Corner profile
4. PVC Mounting profile
5. OBR 302
6. OBR 303
7. Ø4x10 Al/Fe tight blind rivet
8. Polyurethane assembly foam
9. Permanently plastic sealant (recommended SOUDAFLEX)

7.4. F20/1
Joint of partition walls with the ceiling

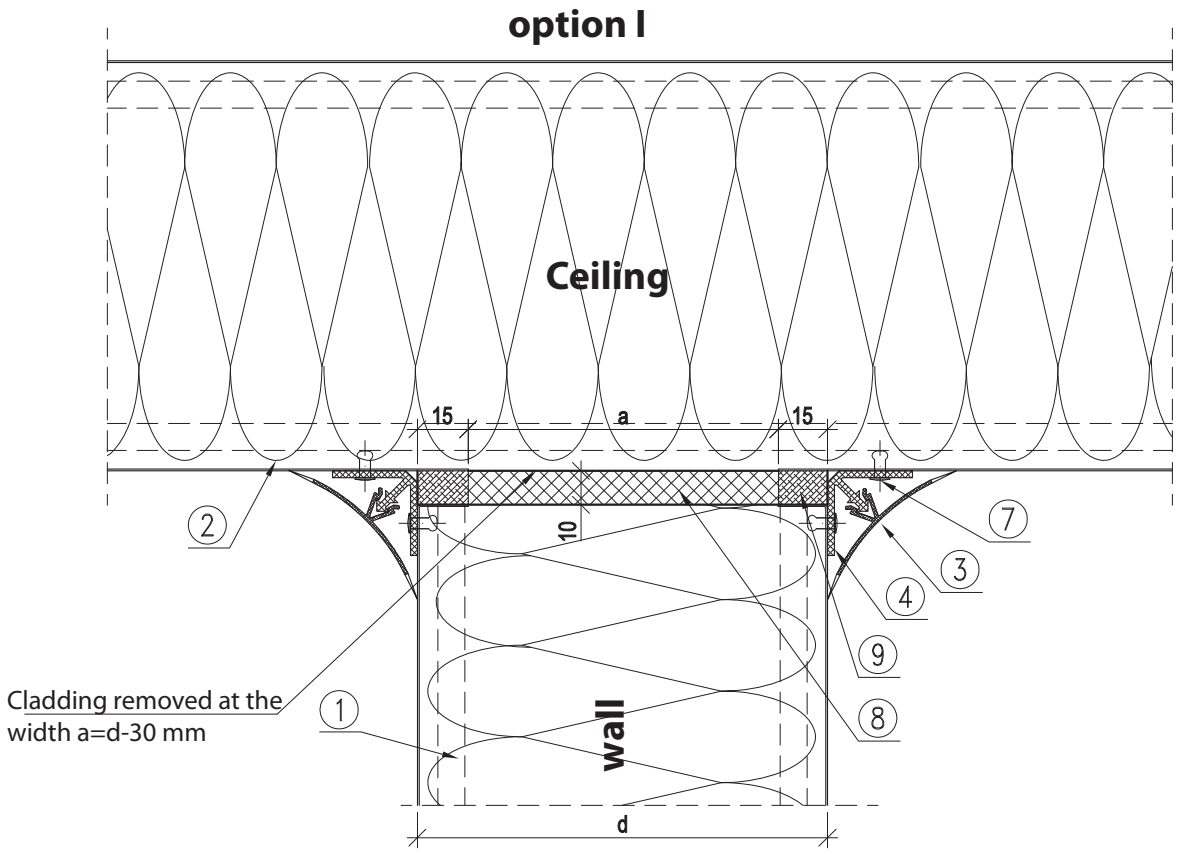

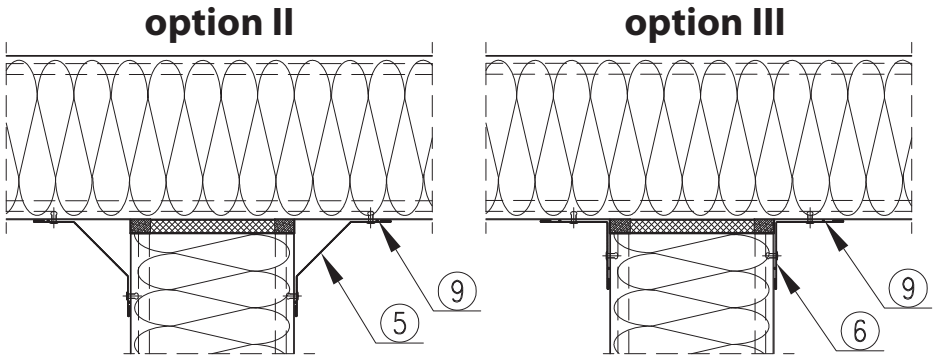

1. BALEXTHERM-PU-F panel
2. BALEXTHERM-PU-F panel
3. EX 14 v EX 40 PVC Corner profile
4. EX 28 v EX 41 PVC Mounting profile
5. OBR 302
6. OBR 303
7. Ø4x10 Al/Fe tight blind rivet
8. Polyurethane assembly foam
9. Permanently plastic sealant (recommended SOUDAFLEX)

7.5. F20/2
Fastening of a partition wall on a groove profile

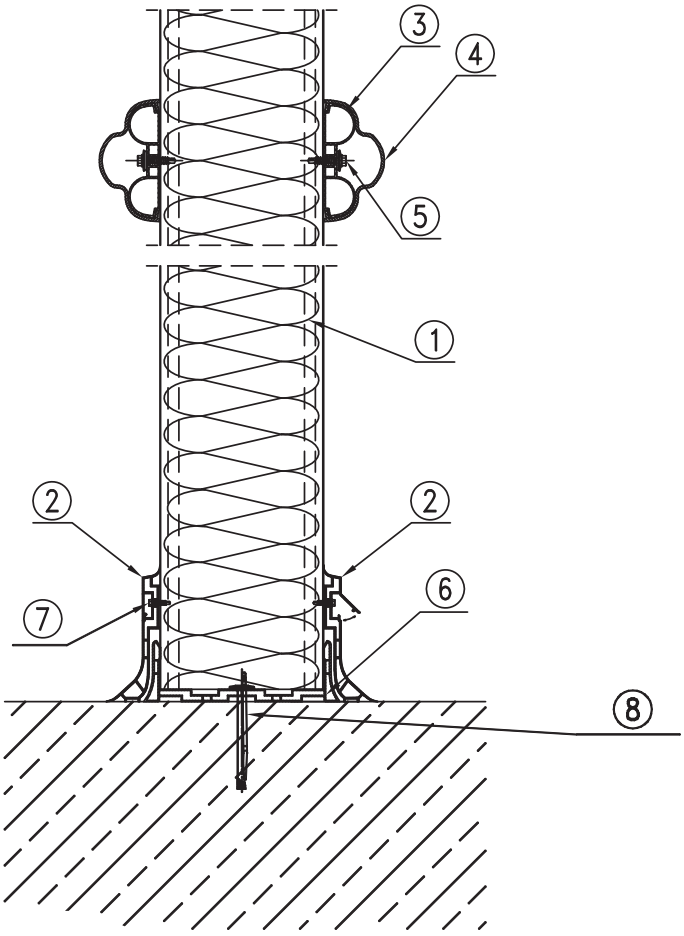

1. BALEXTHERM-PU-F panel
2. Base
3. Wall support of the fender
4. Fender cover
5. Self-drilling screw for fastening of PVC/PE
6. Groove profile
7. Self-drilling screw
8. Anchor bolt

7.6. F21
Joint of external wall with the floor and a concrete base

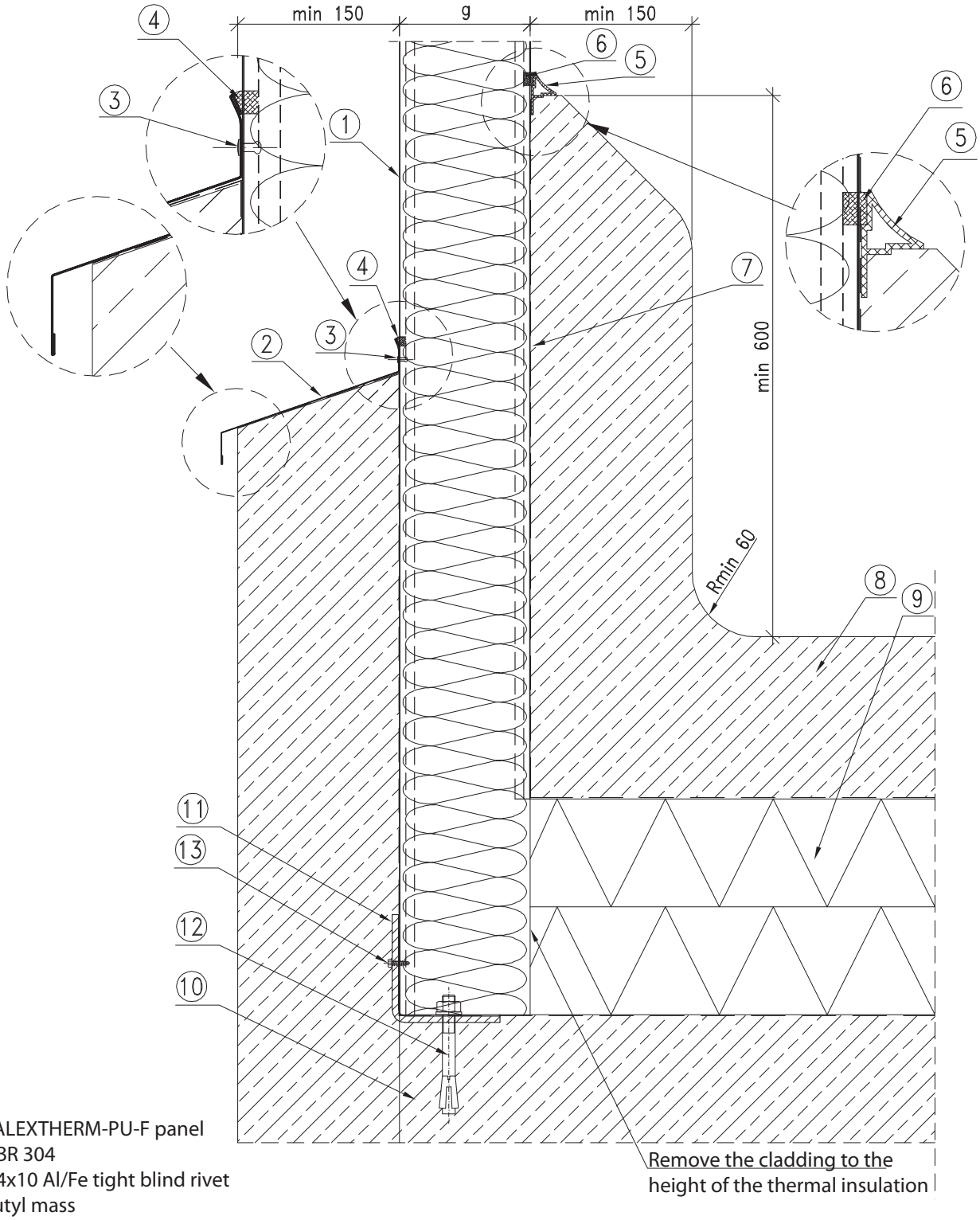

1. BALEXTHERM-PU-F panel
2. OBR 304
3. Ø4x10 Al/Fe tight blind rivet
4. Butyl mass
5. PVC corner profile
6. Permanently plastic sealant (recommended SOUDAFLEX)
7. Vertical and horizontal dampproof course (e.g. PE)
8. Concrete floor acc. to the design
9. Thermal insulation
10. Concrete slab acc. to the construction design
11. Cold-bent angle
12. Concrete anchor bolt
13. Self-drilling fastener

7.7. F22
Joint of internal wall with a concrete base

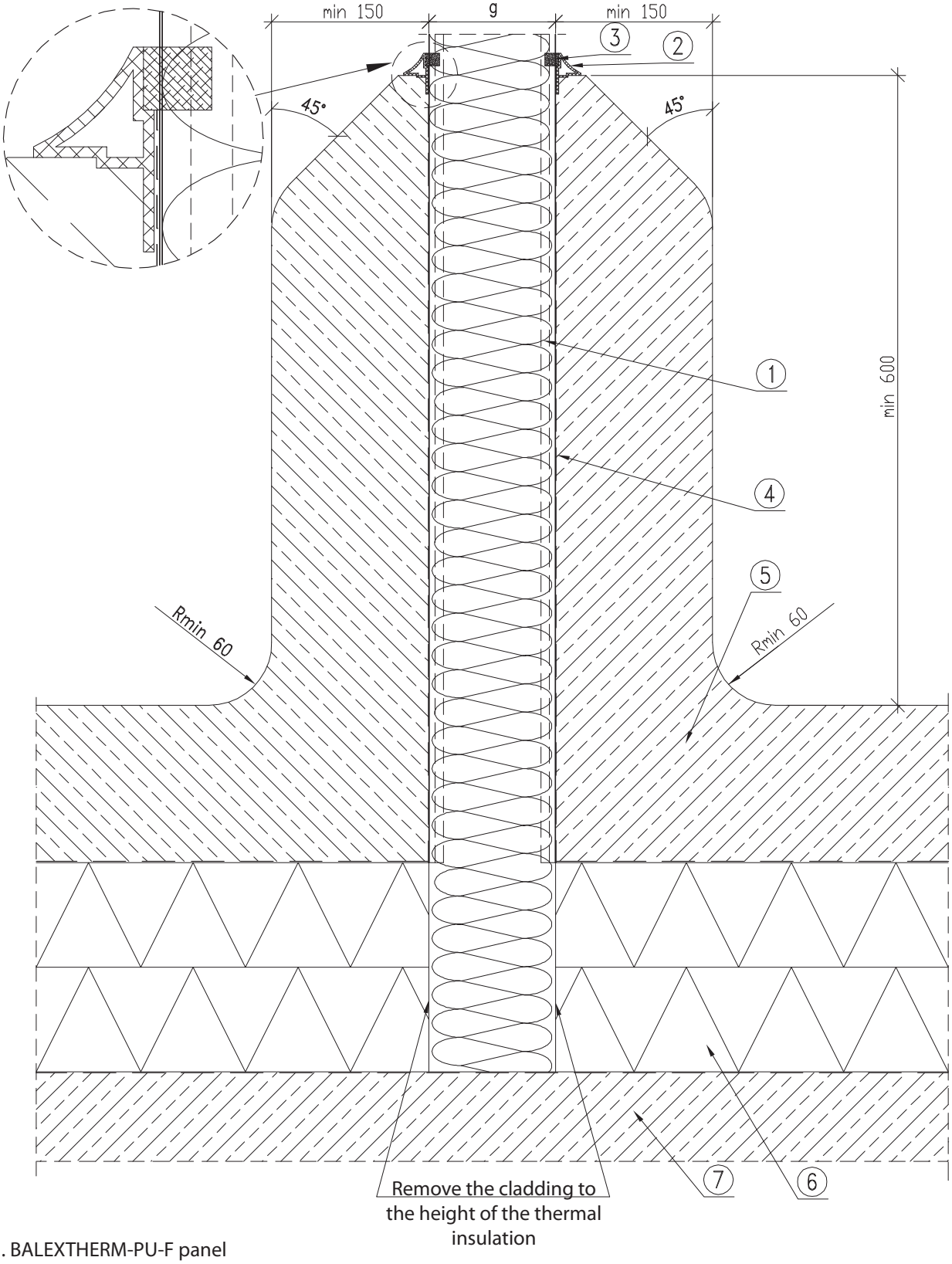

1. BALEXTHERM-PU-F panel
2. PVC corner profile
3. Permanently plastic sealant (recommended SOUDAFLEX)
4. Vertical and horizontal dampproof course (e.g. PE)
5. Concrete floor acc. to the design
6. Thermal insulation
7. Concrete slab acc. to the construction design

7.8. F23
Joint of internal wall with a PVC base

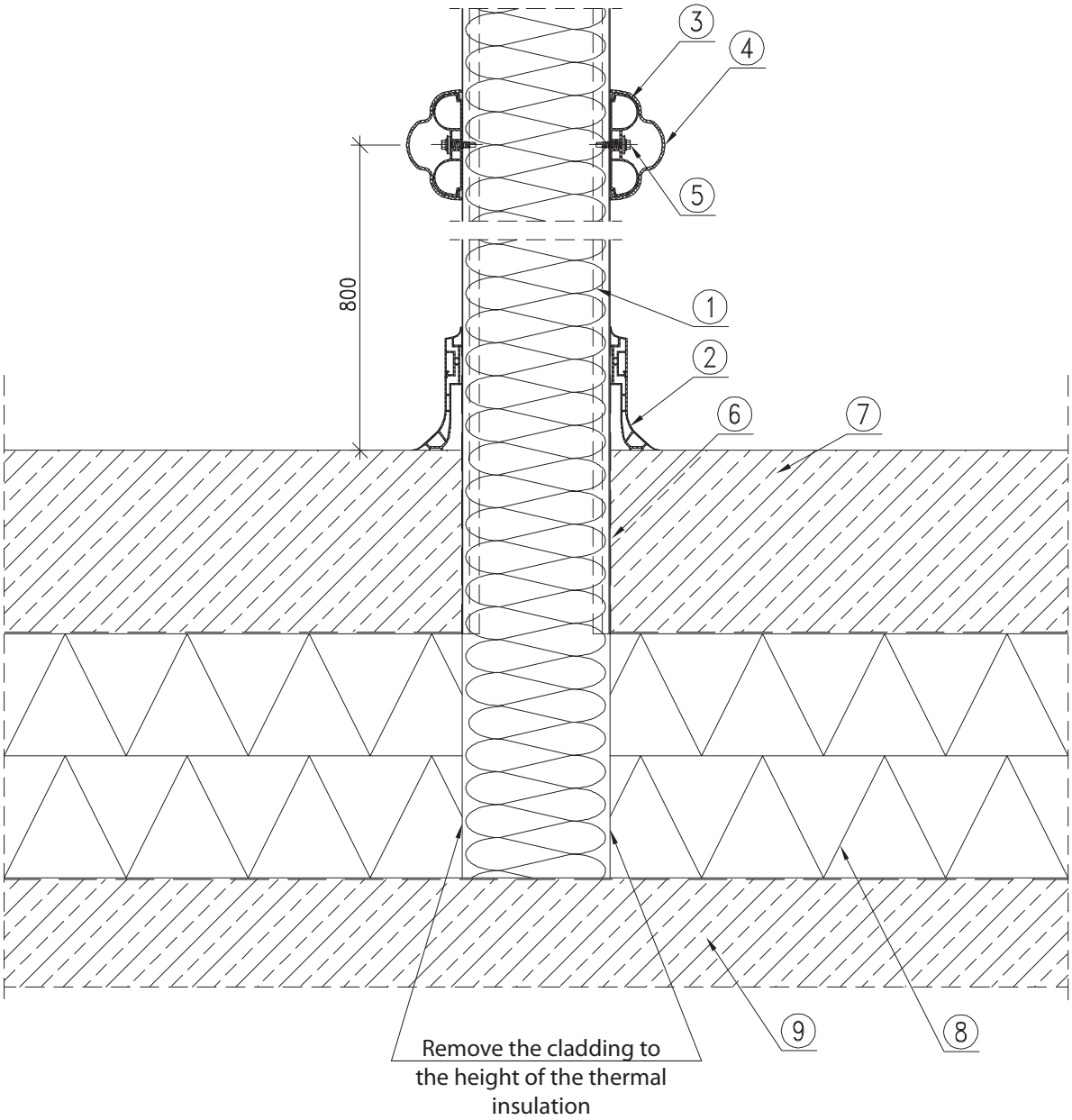

1. BALEXTHERM-PU-F panel
2. PVC base
3. Wall support of the fender
4. Dender cover
5. Assembly screw
6. Vertical and horizontal dampproof course (e.g. PE)
7. Concrete floor acc. to the design
8. Thermal insulation
9. Concrete slab acc. to the construction design

7.9. F24
Cold storage door installation

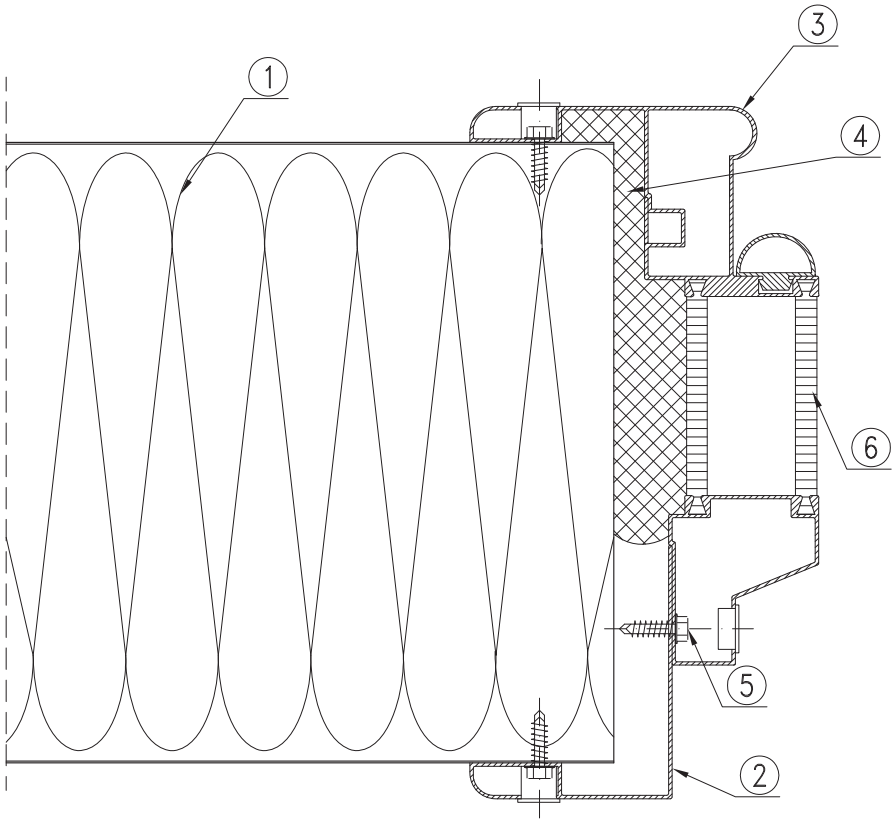

1. BALEXTHERM-PU-F panel
2. External door frame
3. Internal door frame
4. Polyurethane assembly foam
5. Assembly screw
6. Insulating insert

BALEX METAL
HEADQUARTERS

ul. Wejherowska 12C
84-239 Bolszewo, Poland
tel. +48 58 778 44 44
fax +48 58 778 44 48
kontakt@balex.eu
www.balex.eu

BALEX METAL
BUILDING CONSTRUCTION ACADEMY

ul. Spalska 143/147
97-200 Tomaszów Mazowiecki, Poland
tel. +48 44 715 22 10
fax +48 44 715 22 18

Balex Metal Sp. z o.o. is a leading manufacturer of steel building materials in Poland. Our offer includes complete solutions as well as roof and facade steel systems for residential, corporate and agricultural building construction.

REPRESENTATIVE POINTS ABROAD

CZECH REP.	**BALEX METAL S.R.O.**	**Hradec Králové**	Vázní 1097	tel. +420 495 543 267, fax +420 495 482 683
LITHUANIA	**BALEX METAL UAB**	**Wilno**	Savanoriu 174A	tel. +370 527 30 299, fax +370 527 30 295
UKRAINE	**BALEX METAL TOV**	**Kiev**		tel. +48 58 778 44 65, fax +48 58 778 45 03
SLOVAKIA	**BALEX METAL**	**Banská Bystrica**	Partizánska cesta 94, 974 01 Banská Bystrica	tel./fax +421 48 419 75 27
ŁOTWA	**SIA „BALEX METAL"**	**Ražotne Brocēnos**	Liepnieku iela 10, Brocēni, Saldus raj. LV-3851	tel. +371 638 65 886, fax +371 638 07 401
GERMANY	**BALEX METAL**			tel. +49 152 286 200 11
OTHER COUNTRIES	**BALEX METAL Sp. z o.o., Export Division**	**Bolszewo**	ul. Wejherowska 12C, PL 84-239	tel. +48 662 089 890, fax +48 58 778 44 48

indeks 2017-09-22 EN